翻印必究

上海雅马哈建设摩托车销售有限公司

http://www.yamaha-motor.com.cn/

第一版　　2011年5月

YBR125EGS(46S1)/YBR125EGD(46S2)

YAMAHA GENUINE Parts & Accessories

SHANGHAI YAMAHA JIANSHE MOTOR MARKETING CO., LTD.

零件目录

YBR125EGS(46S1)
YBR125EGD(46S2)

46S-F8198-1K-M1

1K46S-415M1

46S1(双启动/压铸轮/碟刹/高挡泥板)

代号	颜色
0564	浅紫深蓝色

代号	颜色
0121	鸡尾酒深红色1

46S2(双启动/压铸轮/碟刹/低挡泥板)

代号	颜色
0564	浅紫深蓝色

代号	颜色
0121	鸡尾酒深红色1

前言

本零件目录记载着封面页所示型号所使用的零件。 当您要订购更换零件时，请参阅本零件目录并正确指示零件号码和零件名称。

1. 零件目录发行后有变更或附加零件时，将会以雅马哈零件信息通知大家。
   建议您应按照雅马哈零件信息修改本零件目录。

2. 省略记号
   本文中所记载的省略记号的意思如下。
   “UR” 需要指定的零件号码。
   “UN” 需要数。
   “AP” 替代零件
   “LM” 当地制造 (必需于当地订购的零件)
   “F#” 框号 (适用的机器号)
   “O/S” 超过尺寸

3. 组件中部件的数量
   • 组件的销售零件，如下所示，在零件名称的前面加上（.）的记号来表示。
   • 每个部件右侧的数字表示各组件单体内该部件的数量。

零件号码	零件名称	数量	备注
2F5 - 83310 - 60	前闪光灯组合	2	
115 - 83311 - 60	.灯泡 (6V - 18W)	1	

4. 适用的图形颜色表示在“备注”中，如下所示。

零件号码	零件名称	数量	备注
2N4 - 24110 - 00 - X5	燃油箱组件	2	MXR
3J1 - 24240 - 10	.燃油箱图形	1	适用于 MXR

5. 请注意插图只用于找寻零件号码时参照，并不适用于组装。 组装时，请使用适用的维修手册。

6. 在参照号码前的星号（*）表示其为在第一版后更改的项目。

7. 适用的系列号码

框架系列号码

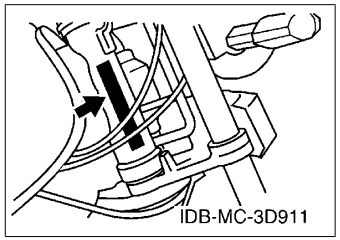

发动机系列号码

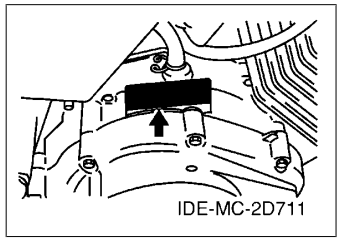

8. 适用的颜色记号((*)标志表示型号颜色。)

省略记号	颜色名称（英文）	颜色名称	颜色记号
DPBMC(*)	DEEP PURPLISH BLUE METALLIC C	浅紫深蓝色	0564
SMX	BLACK METALLIC X	金属黑色	0903
VRC1(*)	VIVID RED COCKTAIL 1	鸡尾酒鲜红色 1	0121
YB	YAMAHA BLACK	雅马哈黑色	0033

9. 适用的初始系列号码

框架系列号码

系列号码	数量栏名称	型号记号

发动机系列号码

系列号码	数量栏名称	型号记号

型号信息

10. 颜色信息

型号代码	颜色类型代码	颜色记号	颜色名称（英文）	颜色名称	省略记号
46S1	A	0564	DEEP PURPLISH BLUE METALLIC C	浅紫深蓝色	DPBMC
	B	0121	VIVID RED COCKTAIL 1	鸡尾酒鲜红色 1	VRC1
46S2	A	0564	DEEP PURPLISH BLUE METALLIC C	浅紫深蓝色	DPBMC
	B	0121	VIVID RED COCKTAIL 1	鸡尾酒鲜红色 1	VRC1

目录

发动机

气缸.....1
曲柄・活塞.....2
阀门.....3
凸轮轴・链条.....4
油泵.....5
进气门.....6
化油器.....7
排气装置.....9
曲轴箱.....10
曲轴箱盖 1.....11
起动器.....12
起动离合器.....13
离合器.....14
传动.....15
换档凸轮・拨叉.....17
变速杆.....18

底盘

车架.....19
挡泥板.....20
挡泥板 2.....21
侧盖.....22
后臂・悬挂.....23
操纵系统.....24
操纵系统 2.....25
前叉.....26
油箱.....28
座位.....30
前轮.....31
前制动器卡钳.....32
后轮.....33
操纵手柄・钢索.....35
前主缸.....36
搁脚・支架.....37
发电机.....39
起动电机.....40
转向灯.....41
仪表.....42
前大灯.....43
前大灯 2.....44
尾灯.....45
手柄开关・杆.....46
电气系统 1.....47
电气系统 2.....48

索引

零件号码索引.....49

CONTENTS

ENGINE

CYLINDER....1
CRANKSHAFT & PISTON....2
VALVE....3
CAMSHAFT & CHAIN....4
OIL PUMP....5
INTAKE....6
CARBURETOR....7
EXHAUST....9
CRANKCASE....10
CRANKCASE COVER 1....11
STARTER....12
STARTER CLUTCH....13
CLUTCH....14
TRANSMISSION....15
SHIFT CAM & FORK....17
SHIFT SHAFT....18

CHASSIS

FRAME....19
FENDER....20
FENDER 2....21
SIDE COVER....22
REAR ARM & SUSPENSION....23
STEERING....24
STEERING 2....25
FRONT FORK....26
FUEL TANK....28
SEAT....30
FRONT WHEEL....31
FRONT BRAKE CALIPER....32
REAR WHEEL....33
STEERING HANDLE & CABLE....35
FRONT MASTER CYLINDER....36
STAND & FOOTREST....37
GENERATOR....39
STARTING MOTOR....40
FLASHER LIGHT....41
METER....42
HEADLIGHT....43
HEADLIGHT 2....44
TAILLIGHT....45
HANDLE SWITCH & LEVER....46
ELECTRICAL 1....47
ELECTRICAL 2....48

INDEX

NUMERICAL INDEX....49

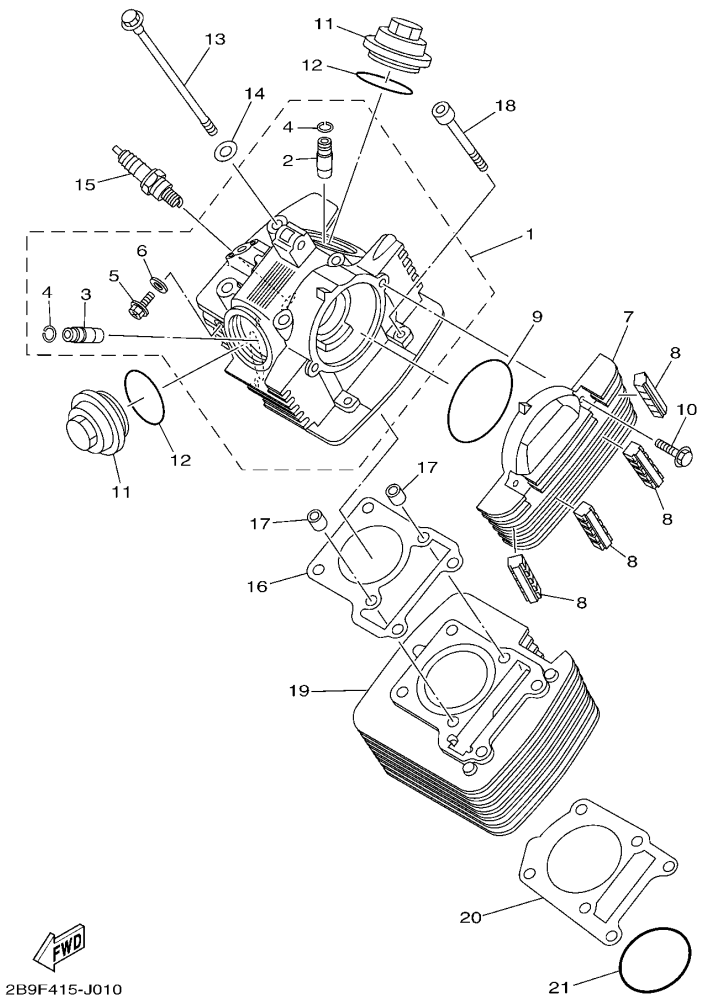

FIG. 1 气缸 CYLINDER

参照号码	零件号码 PART NO.	零件名称 DESCRIPTION	46S1	46S2				备注 REMARKS
1	5VL–E1111–10	气缸头 1 HEAD, CYLINDER 1	1	1				
2	2UJ–11133–10	. 进气门导管 .GUIDE, VALVE 1	1	1				
3	22F–11134–10	. 排气门导管 .GUIDE, VALVE 2	1	1				
4	93440–10109	. 卡环 .CIRCLIP	2	2				
5	90153–06803	. 六角头螺钉 .SCREW, HEXAGON	1	1				
6	90430–06817	. 衬垫 .GASKET	1	1				
7	5VL–E1185–10	气缸头侧盖 3 COVER, CYLINDER HEAD SIDE 3	1	1				
8	5VL–E1161–00	减震垫 1 ABSORBER 1	4	4				
9	93210–79801	0 型环 O-RING	1	1				
10	95022–06020	凸缘螺栓 BOLT, FLANGE	2	2				
11	5VL–E1186–00	气缸头侧盖 2 COVER, CYLINDER HEAD SIDE 2	2	2				
12	93210–44889	0 型环 O-RING	2	2				
13	90105–08724	凸缘螺栓 BOLT, FLANGE	4	4				
14	90201–088C3	平垫圈 WASHER, PLATE	4	4				
15	94700–00869	火花塞 PLUG SPARK (NGK CR6HSA)	1	1				
16	5VL–E1181–00	气缸头衬垫 1 GASKET, CYLINDER HEAD 1	1	1				
17	99530–10114	定位销 PIN, DOWEL	2	2				
18	91312–06090	螺栓 BOLT	2	2				
19	5VL–E1310–00	气缸 CYLINDER	1	1				
20	5VL–E1351–10	气缸衬垫 GASKET, CYLINDER	1	1				
21	93210–57897	0 型环 O-RING	1	1				

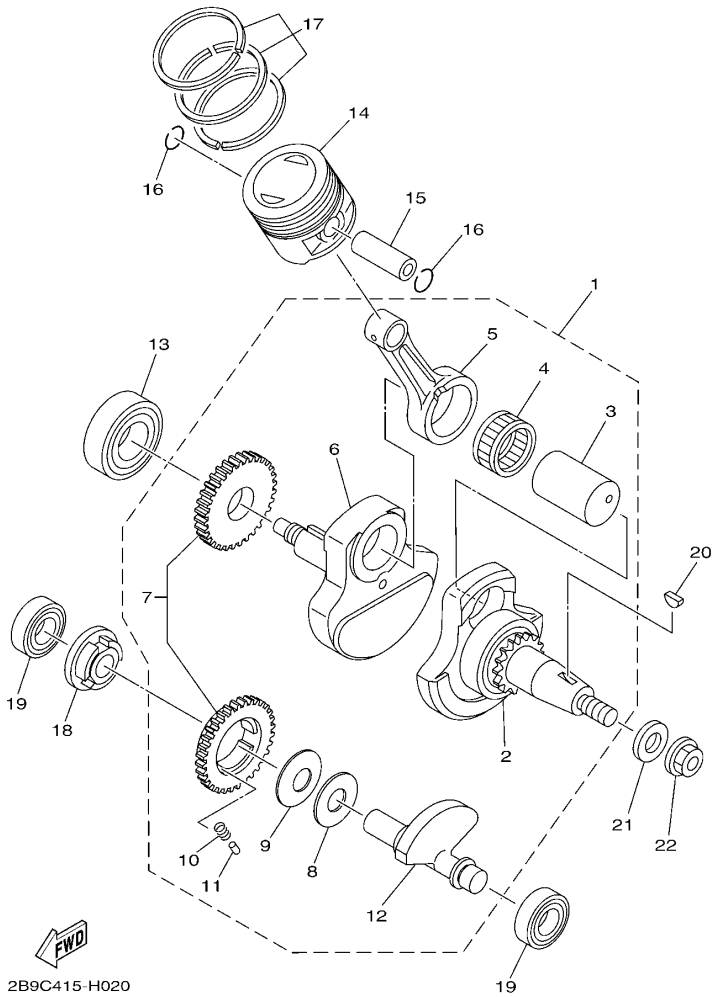

FIG. 2 曲柄・活塞 CRANKSHAFT & PISTON

参照号码	零件号码 PART NO.	零件名称 DESCRIPTION	46S1	46S2				备注 REMARKS
1	5VL–W1140–10	曲柄连杆组合 CRANKSHAFT ASSY	1	1				
2	5VL–W1141–10	. 曲柄 1 .CRANK SUB ASSY 1	1	1				
3	5VL–E1681–00	. 曲柄销 1 .PIN, CRANK 1	1	1				
4	93310–629Y3	. 轴承 .BEARING	1	1				
5	5VL–E1651–00	. 连杆 .ROD, CONNECTING	1	1				
6	5VL–E1422–00	. 曲柄 2 .CRANK 2	1	1				
7	5VL–Y1153–20	. 平衡齿轮总成 .GEAR, BALANCE WEIGHT ASSY.	1	1				
8	5VL–E1533–00	. 减震板 .PLATE, ABSORBER	1	1				
9	90208–26800	. 弹性挡圈 .WASHER, CONICAL SPRING	1	1				
10	90501–16001	. 压簧 .SPRING, COMPRESSION	3	3				
11	93604–08800	. 定位销 .PIN, DOWEL	3	3				
12	5VL–E1454–10	. 平衡轴 1 .WEIGHT 1	1	1				
13	93306–205YP	轴承 BEARING	1	1				
14	5VL–E1631–00	活塞(STD) PISTON (STD)	1	1				
15	5VL–E1633–00	活塞销 PIN, PISTON	1	1				
16	93450–16812	卡环 CIRCLIP	2	2				
17	5VL–W1161–00	活塞环套件 PISTON RING SET (STD)	1	1				
18	5VL–E1496–00	缓冲衬套 BOSS, BUFFER	1	1				
19	93306–202XN	轴承 BEARING	2	2				
20	90280–03017	半圆键 KEY, WOODRUFF	1	1				
21	90201–122H1	平垫圈 WASHER, PLATE	1	1				
22	90179–12863	螺母 NUT	1	1				

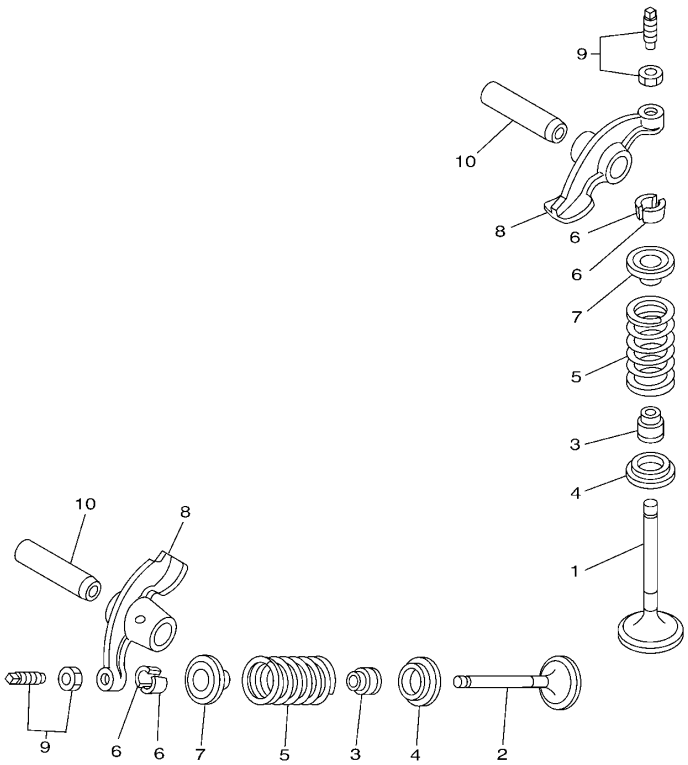

27S1300-G031

FIG. 3 阀门 VALVE

参照号码	零件号码 PART NO.	零件名称 DESCRIPTION	46S1	46S2				备注 REMARKS
1	5VL–E2111–00	进气门 VALVE, INTAKE	1	1				
2	5VL–E2121–00	排气门 VALVE, EXHAUST	1	1				
3	5VL–E2119–00	气门油封 SEAL, VALVE STEM	2	2				
4	5VL–E2116–00	气门弹簧座 SEAT, VALVE SPRING	2	2				
5	5KA–12113–00	气门内弹簧 SPRING, VALVE INNER	2	2				
6	5VL–E2118–00	气门锁夹 COTTER, VALVE	4	4				
7	5VL–E2117–01	气门弹簧座 RETAINER, VALVE SPRING	2	2				
8	5VL–E2151–00	气门摇臂 ARM, VALVE ROCKER	2	2				
9	5VL–Y1215–00	气门调整螺栓组合 SCREW, VALVE ADJUSTING	2	2				
10	5VL–E2156–00	摇臂轴 2 SHAFT, ROCKER 2	2	2				

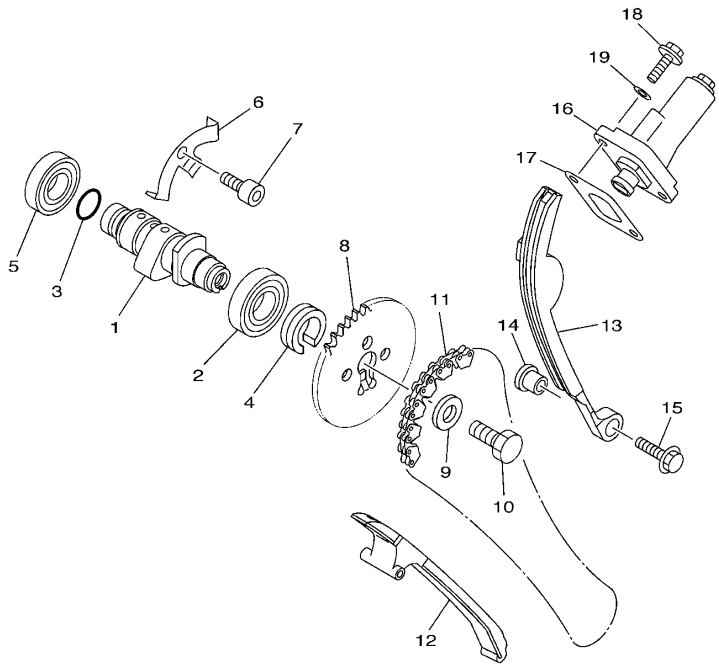

3D91300-D040

FIG. 4 凸轮轴・链条 CAMSHAFT & CHAIN

参照号码	零件号码 PART NO.	零件名称 DESCRIPTION	46S1	46S2				备注 REMARKS
1	5VL–E2171–10	凸轮轴 1 CAMSHAFT 1	1	1				
2	93306–003X6	轴承 BEARING	1	1				
3	93210–108B1	0 型环 O-RING	1	1				
4	90387–16804	轴套 COLLAR	1	1				
5	93306–002Y1	轴承 BEARING	1	1				
6	5VL–E111F–00	面板 PLATE	1	1				
7	91312–06012	螺栓 BOLT	1	1				
8	5VL–E2176–10	链轮 SPROCKET, CAM CHAIN	1	1				
9	90201–08326	平垫圈 WASHER, PLATE	1	1				
10	90101–08820	螺栓 BOLT	1	1				
11	94568–A4090	链条 CHAIN	1	1				
12	5VL–E2231–10	导向限位板 1 GUIDE, STOPPER 1	1	1				
13	5VL–E2241–10	导向限位板 2 GUIDE, STOPPER 2	1	1				
14	5VL–E5598–00	衬套 COLLAR	1	1				
15	95802–06020	凸缘螺栓 BOLT, FLANGE	1	1				
16	5VL–12210–10	链条张紧器组合 TENSIONER ASSY, CAM CHAIN	1	1				
17	5VL–E2213–10	张紧器垫片 GASKET, TENSIONER CASE	1	1				
18	95022–06016	凸缘螺栓 BOLT, FLANGE	2	2				
19	90430–06817	衬垫 GASKET	2	2				

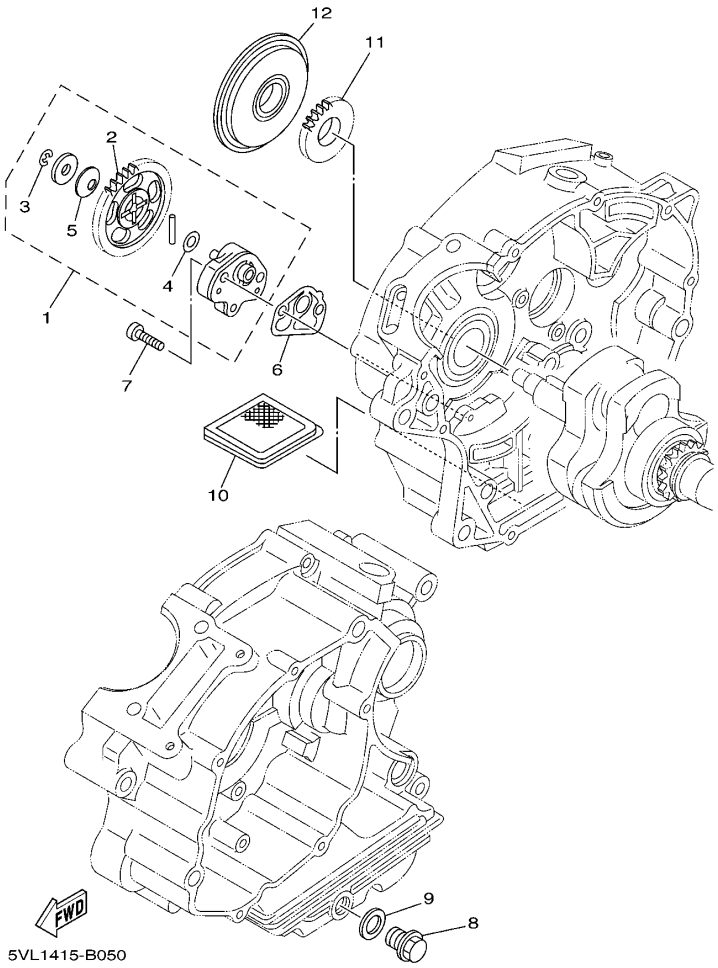

FIG. 5 油泵 OIL PUMP

参照号码	零件号码 PART NO.	零件名称 DESCRIPTION	46S1	46S2				备注 REMARKS
1	5VL–E3300–01	机油泵总成 OIL PUMP ASSY	1	1				
2	5VL–E3325–00	. 从动齿轮 .GEAR, PUMP DRIVEN	1	1				
3	99002–05600	. 卡环 .CLIP	1	1				
4	90201–07641	. 平垫圈 .WASHER, PLATE	1	1				
5	90208–07052	. 弹性挡圈 .WASHER, CONICAL SPRING	1	1				
6	5VL–E3329–00	机油泵盖衬垫 GASKET, PUMP COVER	1	1				
7	90155–06800	螺钉 SCREW, FLAT FILLISTER	2	2				
8	90340–12097	放油旋 PLUG, STRAIGHT SCREW	1	1				
9	90430–12227	衬垫 GASKET	1	1				
10	4FP–E3411–00	机油滤网 STRAINER, OIL	1	1				
11	5VL–E3324–00	机油泵驱动齿轮 GEAR, PUMP DRIVE	1	1				
12	5VL–E3451–00	转子过滤器 FILTER,ROTARY	1	1				

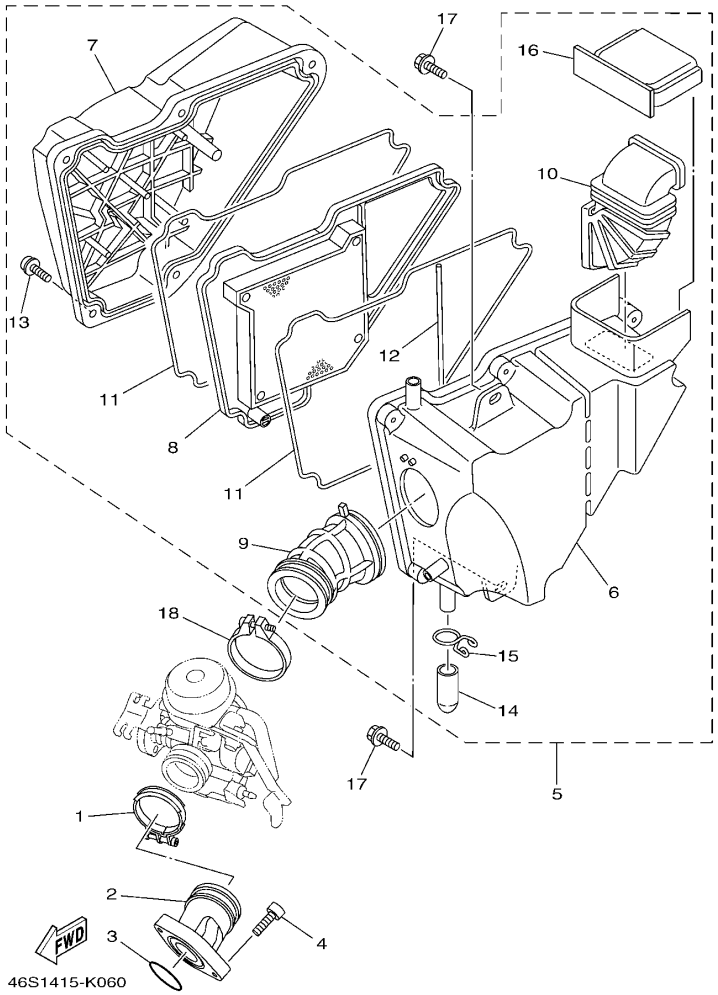

FIG. 6 进气门 INTAKE

参照号码	零件号码 PART NO.	零件名称 DESCRIPTION	46S1	46S2				备注 REMARKS
1	90450–44804	软管夹组合 HOSE CLAMP ASSY	1	1				
2	18C–E3586–10	化油器接头 1 JOINT, CARBURETOR 1	1	1				
3	93210–30611	0 型环 O-RING	1	1				
4	91312–06020	螺栓 BOLT	2	2				
5	18C–E4410–01	空气净化器组合 AIR CLEANER ASSY.	1	1				
6	5VL–E4411–10	. 空气净化器箱 1 .CASE, AIR CLEANER 1	1	1				
7	5VL–E4412–00	. 空气净化器箱盖 1 .CAP, CLEANER CASE 1	1	1				
8	5VL–E4450–11	. 空气净化器滤芯组合 .ELEMENT ASSY, AIR CLEANER	1	1				
9	18C–E4453–00	. 空气净化器接头 1 .JOINT, AIR CLEANER 1	1	1				
10	5VL–E4437–10	. 导管 .DUCT	1	1				
11	5VL–E4452–00	. 密封垫 .SEAL	2	2				
12	5VL–E4462–00	. 密封垫 .SEAL	1	1				
13	97602–06220	. 带垫圈大柱头螺钉 .SCREW, PAN HEAD W/WASHER	5	5				
14	5VL–E443E–00	. 排水管 .PIPE, DRAIN	1	1				
15	5VL–E4424–01	. 卡环 .CLIP, CAP FITTING	1	1				
16	5VL–E4417–00	. 盖 1 .COVER 1	1	1				
17	90119–06869	带垫螺栓 BOLT, WITH WASHER	2	2				
18	18C–E3575–01	箍带 BAND	1	1				

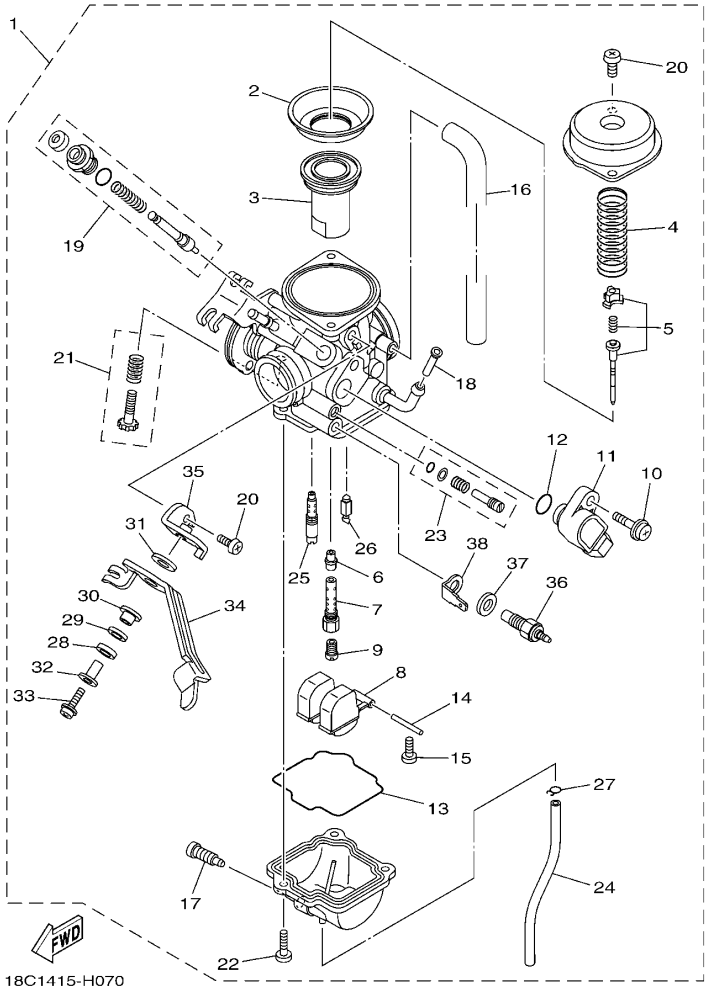

FIG. 7 化油器 CARBURETOR

参照号码	零件号码 PART NO.	零件名称 DESCRIPTION	46S1	46S2				备注 REMARKS
1	18C–E4901–00	化油器总成 1 CARBURETOR ASSY 1	1	1				
2	5LW–24411–00	. 隔板 .DIAPHRAGM	1	1				
3	18D–14112–00	. 节气门阀 1 .VALVE, THROTTLE 1	1	1				
4	18D–14589–10	. 弹簧 .SPRING	1	1				
5	18C–1490J–00	. 滚针套件 .NEEDLE SET	1	1				
6	5P0–14141–13	. 主喷嘴 .NOZZLE, MAIN	1	1				
7	18C–14261–00	. 支座 .HOLDER	1	1				
8	5HK–14985–00	. 浮子 .FLOAT	1	1				
9	3G2–14231–22	. 主量孔 (#110) .JET, MAIN (#110)	1	1				
10	5YP–14429–00	. 螺钉 .SCREW	1	1				
11	18D–H5885–00	. 节流传感件组合 .THROTTLE SENSOR ASSY	1	1				
12	5YP–14561–00	. 0 型环 .O-RING	1	1				
13	5HK–14147–00	. 0 型环 .O-RING	1	1				
14	353–14186–00	. 浮子销 .PIN, FLOAT	1	1				
15	98507–04008	. 十字螺钉 .SCREW, PAN HEAD	2	2				
16	5YY–14197–00	. 管 .PIPE	1	1				
17	5LW–14191–00	. 排泄螺钉 .PLUG, DRAIN	1	1				
18	5LW–14994–00	. 滤网 .NET, FILTER	1	1				
19	18D–1410A–00	. 起动器套件 .STARTER SET	1	1				
20	98507–05008	. 十字螺钉 .SCREW, PAN HEAD	3	3				
21	5YY–14103–00	. 节气门螺钉组件 .THROTTLE SCREW SET	1	1				
22	98507–04014	. 十字螺钉 .SCREW, PAN HEAD	3	3				
23	18D–14105–00	. 混合气调整螺钉组件 .PILOT SCREW SET	1	1				
24	18D–14196–00	. 溢流管 1 .PIPE, OVER FLOW 1	1	1				
25	5P0–14142–17	. 低速量孔 (#17. 5) .JET, PILOT (#17.5)	1	1				
26	5TN–14150–00	. 针阀组件 .NEEDLE ASSY	1	1				
27	22F–14139–00	. 管夹 .CLIP, PIPE	1	1				

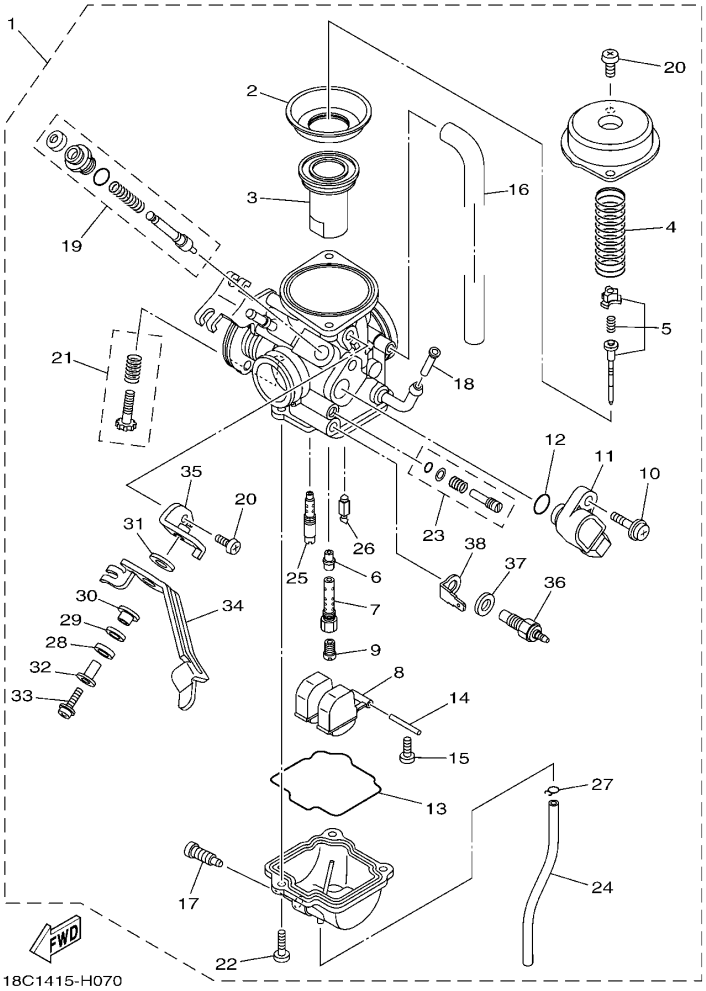

FIG. 7 化油器 CARBURETOR

参照号码	零件号码 PART NO.	零件名称 DESCRIPTION	46S1	46S2				备注 REMARKS
28	92907–08100	. 弹性垫圈 .WASHER, SPRING	1	1				
29	3SP–14128–00	. 垫圈 .WASHER	1	1				
30	3SP–14194–00	. 卡座 .RING	1	1				
31	18D–14126–00	. 衬垫 .GASKET	1	1				
32	18D–14264–00	. 衬套 .COLLAR	1	1				
33	3SP–14216–00	. 螺钉 .SCREW	1	1				
34	18D–14276–00	. 杠杆 .LEVER	1	1				
35	18D–14867–00	. 托架 .BRACKET	1	1				
36	5FU–83790–00	. 加热器 .HEATER ASSY (15W)	1	1				
37	5CY–14951–00	. 垫圈 .WASHER	1	1				
38	5FU–82103–00	. 接头 1 .TERMINAL 1	1	1				

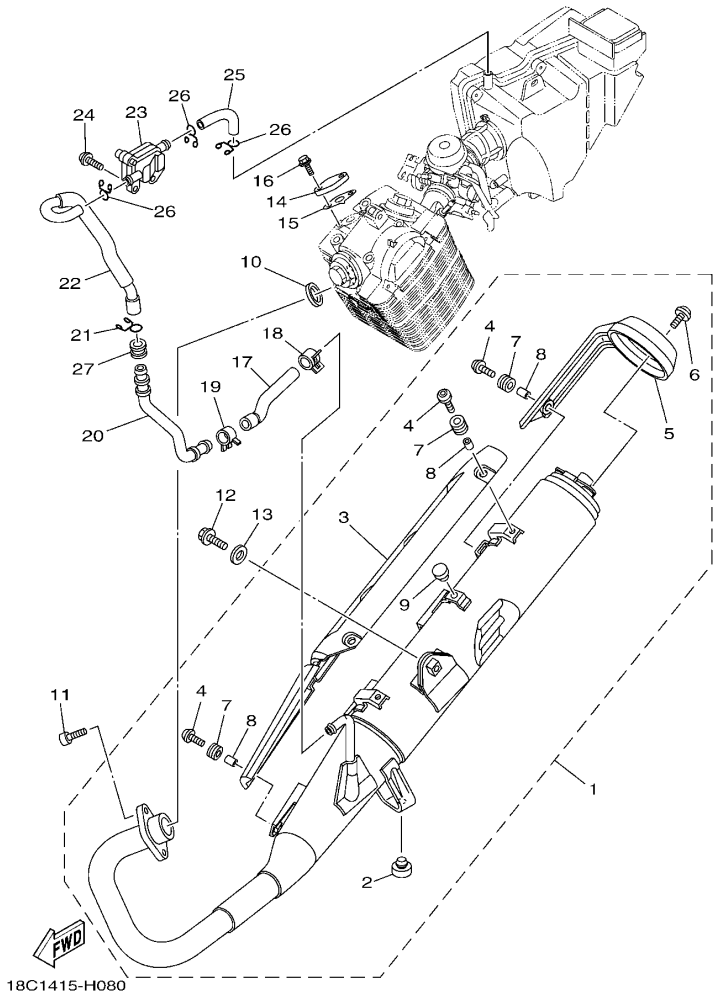

FIG. 8 排气装置 EXHAUST

参照号码	零件号码 PART NO.	零件名称 DESCRIPTION	46S1	46S2				备注 REMARKS
1	18C–Y1471–02	消音器总成 MUFFLER ASSY 1	1	1				
2	4TU–F4741–00	. 缓冲座 .PAD, SEAT	1	1				
3	18C–E4758–00	. 消声器保护 .PROTECTOR, SILENCER	1	1				
4	90149–06833	. 螺钉 .SCREW	6	6				
5	18C–E4799–00	. 盖 .CAP	1	1				
6	90111–06015	. 六角螺栓 .BOLT,HEX. SOCKET BUTTON	3	3				
7	90480–12581	. 橡胶垫 .GROMMET	6	6				
8	90387–06023	. 轴套 .COLLAR	6	6				
9	2TY–F4181–00	. 定位减震器 1 .DAMPER, LOCATING 1	1	1				
10	5VL–E4613–00	排气管衬垫 GASKET, EXHAUST PIPE	1	1				
11	91312–06020	螺栓 BOLT	2	2				
12	95812–08020	凸缘螺栓 BOLT, FLANGE	1	1				
13	90201–08840	平垫圈 WASHER, PLATE	1	1				
14	3D9–E113F–00	板 3 PLATE 3	1	1				
15	5VL–E4815–00	衬垫 GASKET	1	1				
16	95022–06016	凸缘螺栓 BOLT, FLANGE	2	2				
17	3D9–E4881–00	弯曲软管 1 HOSE, BEND 1	1	1				
18	90467–16807	卡环 CLIP	1	1				
19	90467–19801	卡环 CLIP	1	1				
20	18C–E4873–00	管 3 PIPE 3	1	1				
21	90467–18806	卡环 CLIP	1	1				
22	18C–E4882–00	弯曲软管 2 HOSE, BEND 2	1	1				
23	18D–E4803–00	二次进气系统 AIR INDUCTION SYSTEM ASSY	1	1				
24	92012–06012	螺钉 BOLT, BUTTON HEAD	2	2				
25	3D9–E4883–00	弯曲软管 3 HOSE, BEND 3	1	1				
26	90467–14802	卡环 CLIP	3	3				
27	90480–20M05	橡胶垫 GROMMET	1	1				

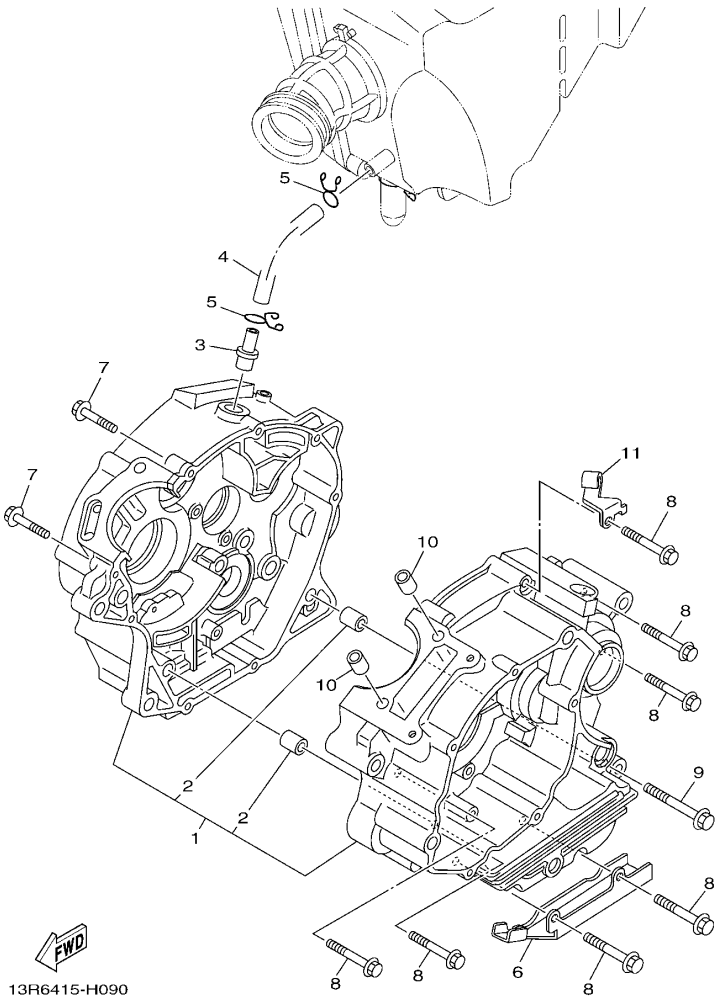

FIG. 9 曲轴箱 CRANKCASE

参照号码	零件号码 PART NO.	零件名称 DESCRIPTION	46S1	46S2				备注 REMARKS
1	5VL–W1510–10	曲轴箱组合 CRANKCASE ASSY	1	1				
2	99530–10114	. 定位销 .PIN, DOWEL	2	2				
3	4FP–E1167–00	通气管 2 PIPE, BREATHER 2	1	1				
4	5VL–E1166–00	通气管 1 PIPE, BREATHER 1	1	1				
5	90467–12828	卡环 CLIP	2	2				
6	90462–16801	线夹 CLAMP	1	1				
7	95022–06030	凸缘螺栓 BOLT, FLANGE	2	2				
8	95022–06045	凸缘螺栓 BOLT, FLANGE	7	7				
9	95022–06055	凸缘螺栓 BOLT, FLANGE	1	1				
10	99530–10114	定位销 PIN, DOWEL	2	2				
11	5VL–E5441–00	离合器钢索支架 HOLDER, CLUTCH CABLE	1	1				

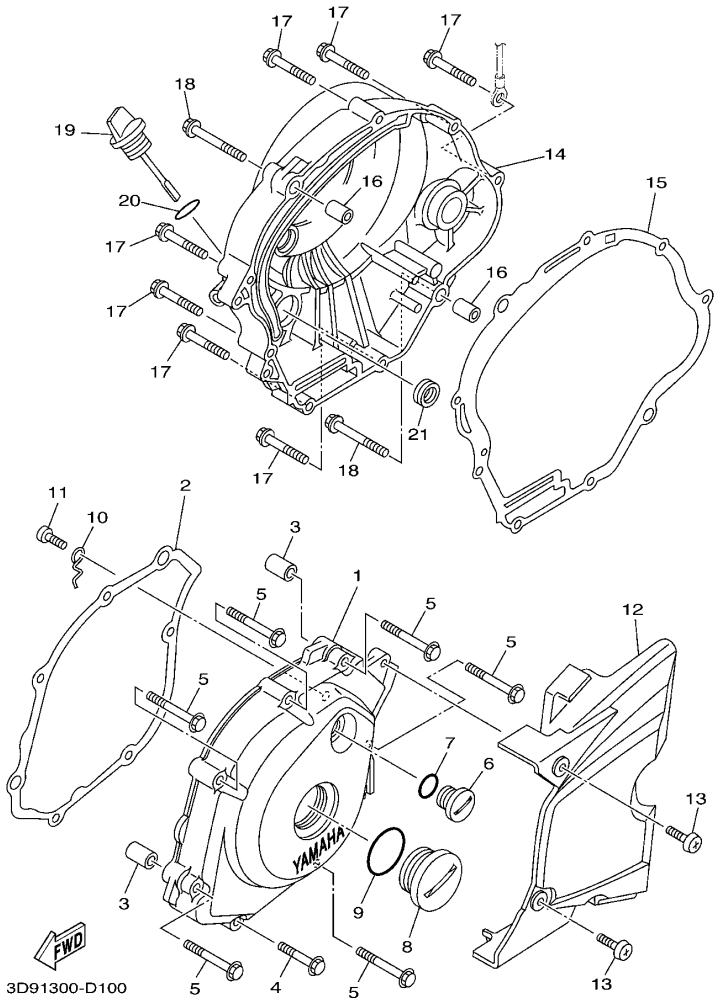

FIG. 10 曲轴箱盖 1 CRANKCASE COVER 1

参照号码	零件号码 PART NO.	零件名称 DESCRIPTION	46S1	46S2				备注 REMARKS
1	5VL–E5411–10	曲轴箱盖 1 COVER, CRANKCASE 1	1	1				
2	5VL–E5451–10	曲轴箱盖衬垫 1 GASKET, CRANKCASE COVER 1	1	1				
3	99530–10114	定位销 PIN, DOWEL	2	2				
4	95022–06035	凸缘螺栓 BOLT, FLANGE	1	1				
5	95022–06050	凸缘螺栓 BOLT, FLANGE	6	6				
6	90340–14810	螺塞 PLUG,STRAIGHT SCREW	1	1				
7	93210–14899	0 型环 O-RING	1	1				
8	90340–32812	螺塞 PLUG,STRAIGHT SCREW	1	1				
9	93210–328A4	0 型环 O-RING	1	1				
10	5VL–E5191–00	面板 PLATE	1	1				
11	98512–06010	十字螺钉 SCREW, PAN HEAD	1	1				
12	5VL–E5418–01	链条箱盖 COVER, CHAIN CASE	1	1				
13	98902–06016	十字槽盘头螺钉 SCREW, BIND	2	2				
14	5VL–E5421–00	曲轴箱盖 2 COVER, CRANKCASE 2	1	1				
15	5VL–E5461–10	曲轴箱盖衬垫 2 GASKET, CRANKCASE COVER 2	1	1				
16	99530–10114	定位销 PIN, DOWEL	2	2				
17	95022–06035	凸缘螺栓 BOLT, FLANGE	7	7				
18	95022–06045	凸缘螺栓 BOLT, FLANGE	2	2				
19	5VL–E5362–00	油标塞 PLUG, OIL LEVEL	1	1				
20	93210–19809	0 型环 O-RING	1	1				
21	93101–10800	油封 OIL SEAL	1	1				

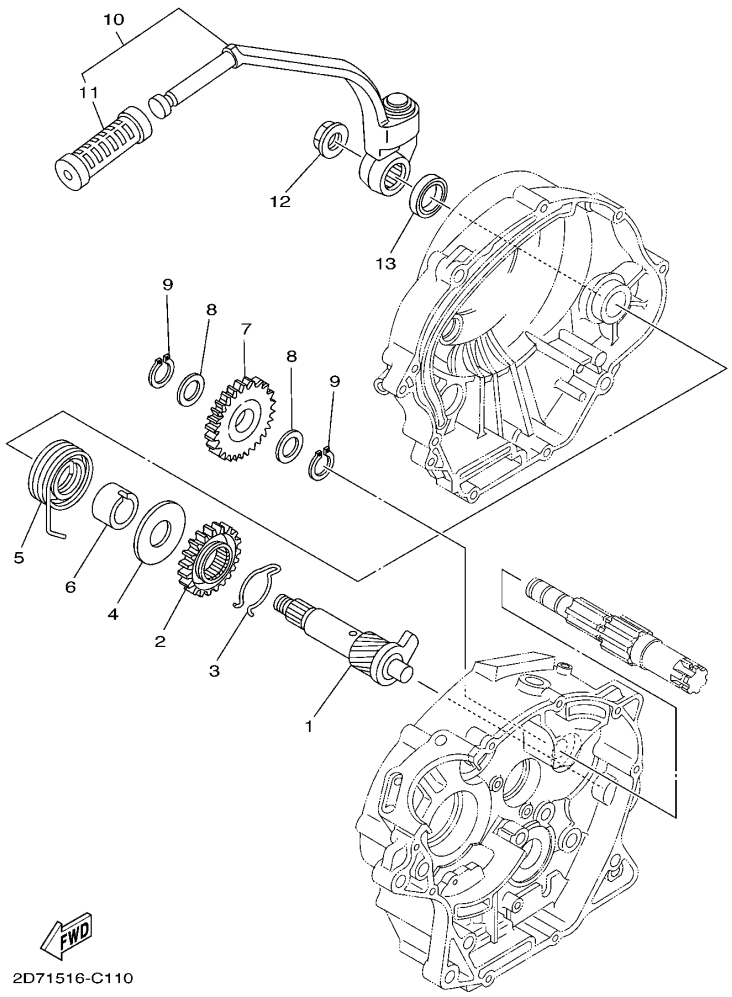

FIG. 11 起动器 STARTER

参照号码	零件号码 PART NO.	零件名称 DESCRIPTION	46S1	46S2				备注 REMARKS
1	5VL–E5660–01	起动轮轴组合 KICK AXLE ASSY	1	1				
2	4FP–E5641–00	起动齿轮 GEAR, KICK	1	1				
3	90468–26813	卡环 CLIP	1	1				
4	90201–208D5	平垫圈 WASHER, PLATE	1	1				
5	90508–26836	扭簧 SPRING, TORSION	1	1				
6	4FP–E5666–00	衬套 SPACER	1	1				
7	5VL–E5651–00	起动空转齿轮 GEAR, KICK IDLE	1	1				
8	90201–152H7	平垫圈 WASHER, PLATE	2	2				
9	99009–15400	卡环 CIRCLIP	2	2				
10	5VL–E5620–01	起动曲柄组合 KICK CRANK ASSY	1	1				
11	47V–E5618–00	. 起动踏杆套 .COVER, KICK LEVER	1	1				
12	90179–12813	螺母 NUT	1	1				
13	93109–20806	油封 OIL SEAL	1	1				

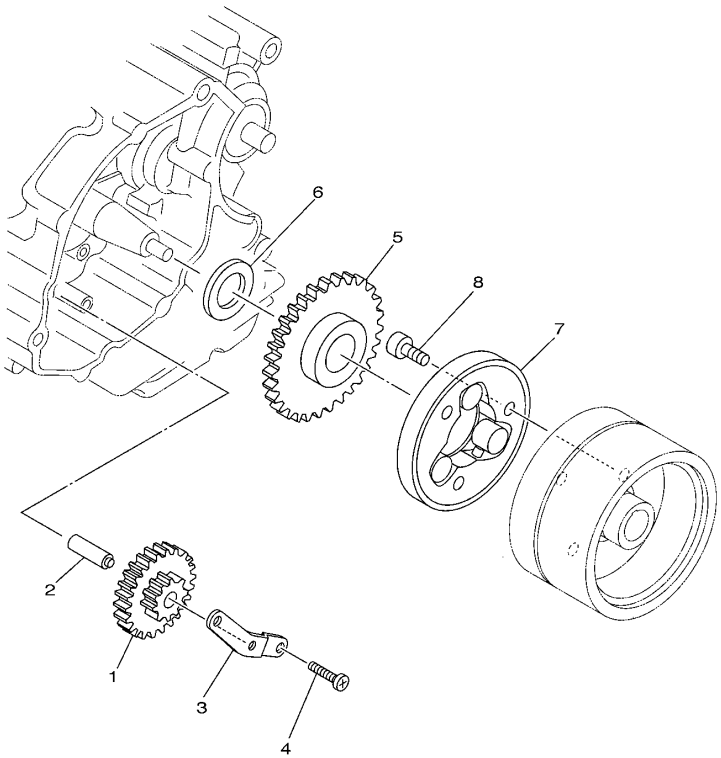

5VL1415-B120

FIG. 12 起动离合器 STARTER CLUTCH

参照号码	零件号码 PART NO.	零件名称 DESCRIPTION	46S1	46S2				备注 REMARKS
1	5VL–E5512–00	惰齿轮 1 GEAR, IDLER 1	1	1				
2	5VL–E5521–00	轴 1 SHAFT 1	1	1				
3	5VL–E5532–00	惰齿轮面板 PLATE, IDLE GEAR	1	1				
4	98512–06012	十字螺钉 SCREW, PAN HEAD	2	2				
5	5VL–E5517–00	惰齿轮 2 GEAR, IDLER 2	1	1				
6	90201–258D7	平垫圈 WASHER, PLATE	1	1				
7	4FP–E5580–00	起动离合器外部组合 STARTER CLUTCH OUTER ASSY	1	1				
8	91312–08016	螺栓 BOLT	3	3				

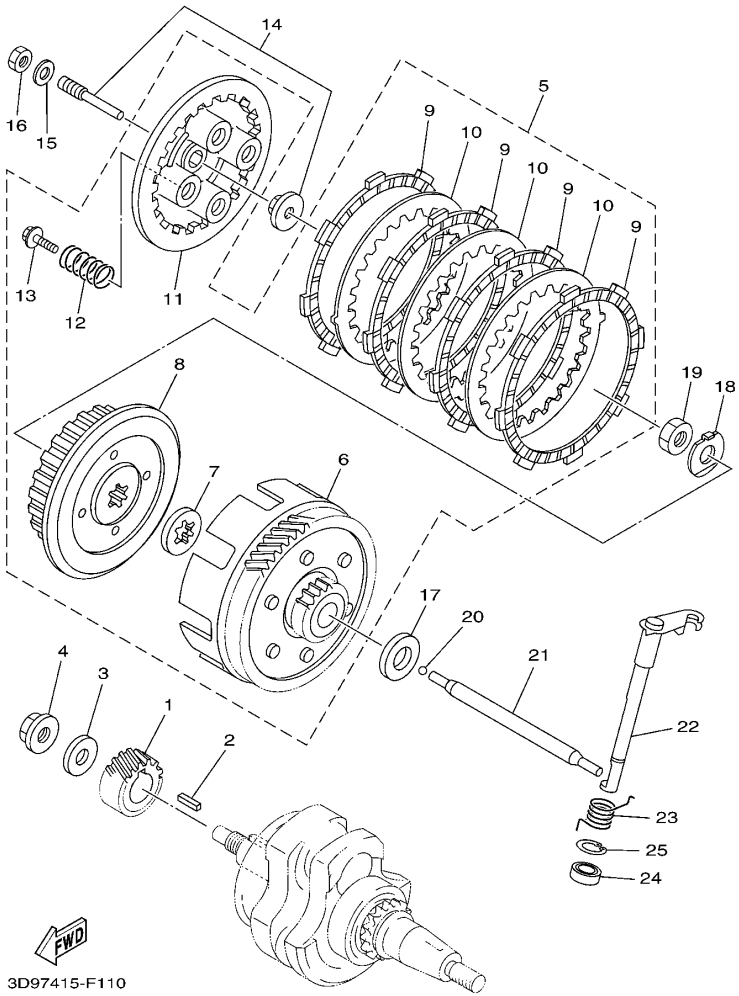

FIG. 13 离合器 CLUTCH

参照号码	零件号码 PART NO.	零件名称 DESCRIPTION	46S1	46S2				备注 REMARKS
1	5VL–E6111–00	初级驱动齿轮 GEAR, PRIMARY DRIVE	1	1				
2	90282–05001	平键 KEY, STRAIGHT (5MMX16MM)	1	1				
3	90201–122H1	平垫圈 WASHER, PLATE	1	1				
4	90179–12813	螺母 NUT	1	1				
5	5VL–E6300–10	离合器总成 CLUTCH ASSY	1	1				
6	5VL–E6150–00	. 从动齿轮组合 .PRIMARY DRIVEN GEAR COMP.	1	1				
7	5VL–E6154–00	. 推板 1 .PLATE, THRUST 1	1	1				
8	5VL–E6371–10	. 离合器轮毂 .BOSS, CLUTCH	1	1				
9	5VL–E6321–10	. 摩擦片 .PLATE, FRICTION	4	4				
10	5VL–E6324–00	. 离合器片 1 .PLATE, CLUTCH 1	3	3				
11	5VL–E6351–00	. 压板 1 .PLATE, PRESSURE 1	1	1				
12	5VL–E6333–10	. 离合器弹簧 1 .SPRING, CLUTCH 1	4	4				
13	5VL–E6337–00	. 弹簧螺钉 .SCREW, SPRING	4	4				
14	5VL–Y1635–10	推杆组合 PUSH LEVER COMP.	1	1				
15	92902–06200	垫圈 WASHER	1	1				
16	95302–06600	螺母 NUT	1	1				
17	5VL–E6164–10	推板 2 PLATE, THRUST 2	1	1				
18	90215–12211	制动垫圈 WASHER, LOCK	1	1				
19	90170–12060	螺母 NUT	1	1				
20	93503–16824	钢球 BALL	1	1				
21	5VL–E6357–01	推杆 2 ROD, PUSH 2	1	1				
22	5VL–E6381–02	推杆组合 PUSH LEVER COMP.	1	1				
23	90508–16800	扭簧 SPRING, TORSION	1	1				
24	93102–12802	油封 OIL SEAL	1	1				
25	99009–20500	卡环 CIRCLIP	1	1				

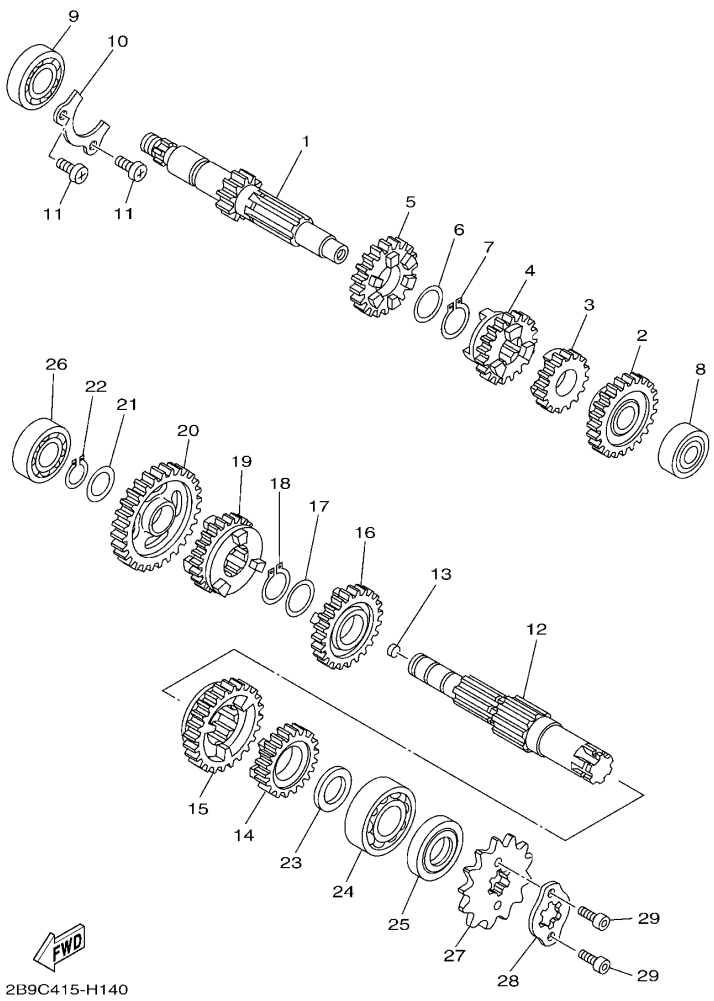

FIG. 14 传动 TRANSMISSION

参照号码	零件号码 PART NO.	零件名称 DESCRIPTION	46S1	46S2				备注 REMARKS
1	5VL–E7411–00	主轮轴 AXLE, MAIN (14T)	1	1				
2	5VL–E7151–00	五档主动齿轮 GEAR, 5TH PINION (24T)	1	1				
3	5VL–E7121–00	二档主动齿轮 GEAR, 2ND PINION (18T)	1	1				
4	5VL–E7131–00	三档主动齿轮 GEAR, 3RD PINION (19T)	1	1				
5	5VL–E7141–00	四档主动齿轮 GEAR, 4TH PINION (22T)	1	1				
6	90201–20266	平垫圈 WASHER, PLATE (T=1.0)	1	1				
7	93410–20809	卡环 CIRCLIP	1	1				
8	93306–201Y8	轴承 BEARING	1	1				
9	93306–203YT	轴承 BEARING	1	1				
10	5VL–E7471–00	盖板 PLATE, COVER	1	1				
11	98512–06012	十字螺钉 SCREW, PAN HEAD	2	2				
12	5VL–E7421–00	驱动轴 AXLE, DRIVE	1	1				
13	90331–07031	密封塞 PLUG	1	1				
14	5VL–E7251–00	五档从动齿轮 GEAR, 5TH WHEEL (21T)	1	1				
15	5VL–E7221–00	二档从动齿轮 GEAR, 2ND WHEEL (32T)	1	1				
16	5VL–E7231–00	三档从动齿轮 GEAR, 3RD WHEEL (25T)	1	1				
17	90201–20266	平垫圈 WASHER, PLATE (T=1.0)	1	1				
18	93410–20809	卡环 CIRCLIP	1	1				
19	5VL–E7241–00	四档从动齿轮 GEAR, 4TH WHEEL (23T)	1	1				
20	5VL–E7211–00	一档从动齿轮 GEAR, 1ST WHEEL (37T)	1	1				
21	90201–15700	平垫圈 WASHER, PLATE	1	1				
22	99009–15400	卡环 CIRCLIP	1	1				
23	90201–20272	平垫圈 WASHER, PLATE	1	1				
24	93306–204YD	轴承 BEARING	1	1				
25	93102–20854	油封 OIL SEAL	1	1				
26	93306–202XP	轴承 BEARING	1	1				
27	93822–14813	驱动链轮 SPROCKET, DRIVE (14T)	1	1				

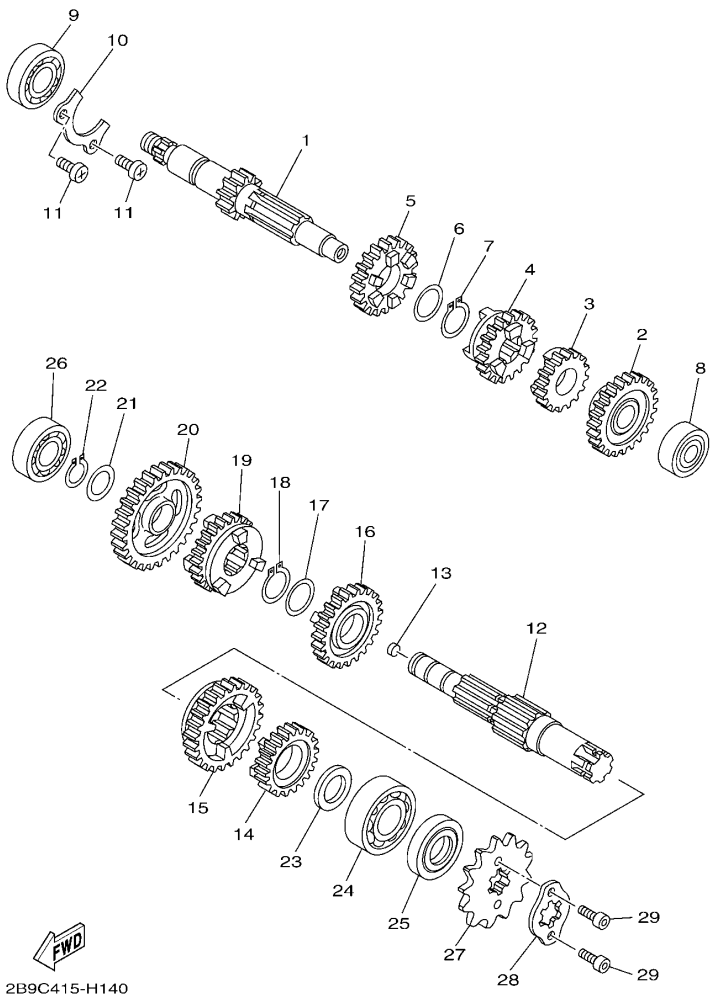

FIG. 14 传动 TRANSMISSION

参照号码	零件号码 PART NO.	零件名称 DESCRIPTION	46S1	46S2				备注 REMARKS
28	3D9–E7456–01	驱动链轮挡圈 HOLDER, SPROCKET	1	1				
29	91312–05010	螺栓 BOLT	2	2				

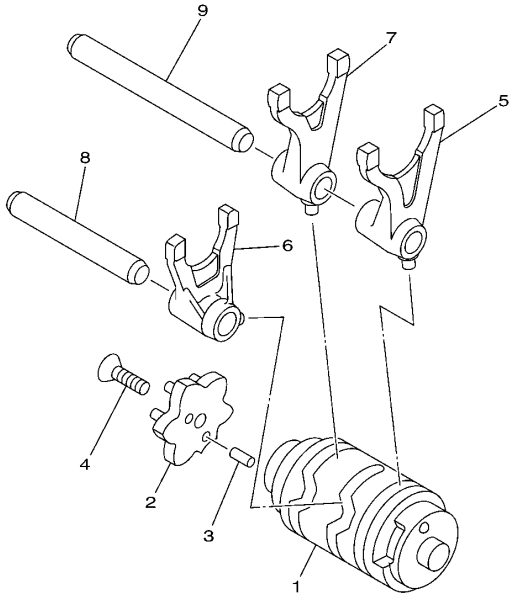

5HP1100-0140

FIG. 15 换档凸轮・拨叉 SHIFT CAM & FORK

参照号码	零件号码 PART NO.	零件名称 DESCRIPTION	46S1	46S2				备注 REMARKS
1	5VL–Y1854–00	换档凸轮总成 SHIFT CAM ASSY	1	1				
2	2D0–E8185–00	星形轮 SEGMENT	1	1				
3	93604–10837	定位销 PIN, DOWEL	2	2				
4	90151–06818	沉头螺钉 SCREW, COUNTERSUNK	1	1				
5	5VL–E8511–00	换挡拨叉 1 FORK, SHIFT 1	1	1				
6	5VL–E8512–00	换挡拨叉 2 FORK, SHIFT 2	1	1				
7	5VL–E8513–00	换挡拨叉 3 FORK, SHIFT 3	1	1				
8	5VL–E8531–00	拨叉导杆 1 BAR, SHIFT FORK GUIDE 1	1	1				
9	5VL–E8535–00	拨叉导杆 2 BAR, SHIFT FORK GUIDE 2	1	1				

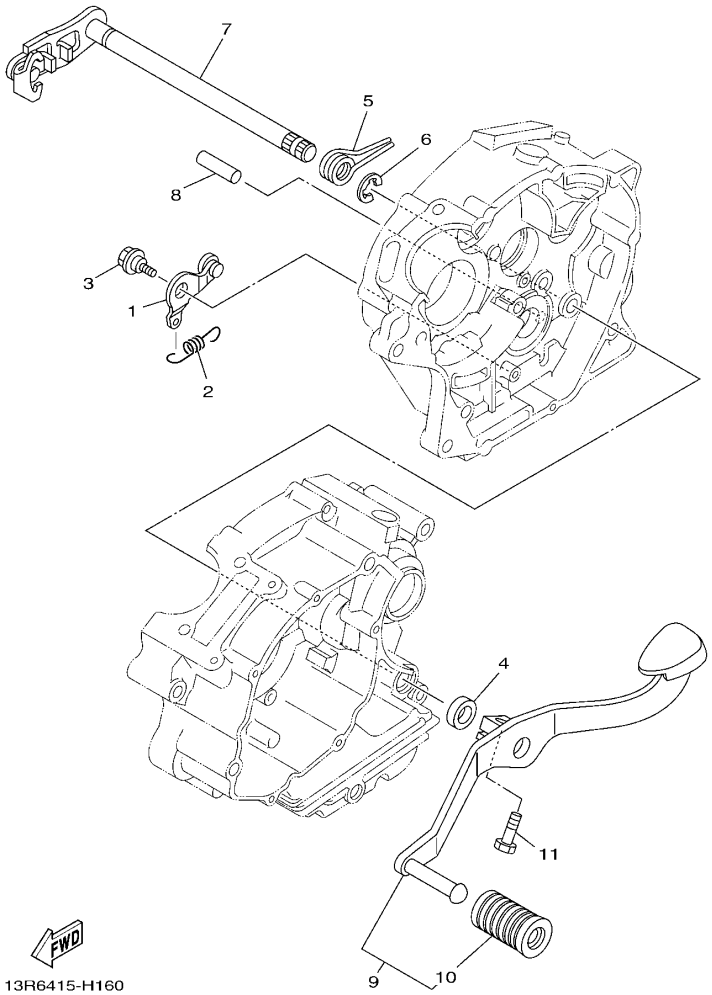

FIG. 16 变速杆 SHIFT SHAFT

参照号码	零件号码 PART NO.	零件名称 DESCRIPTION	46S1	46S2				备注 REMARKS
1	5VL–E8140–00	限位杆组合 STOPPER LEVER ASSY	1	1				
2	5VL–E8337–00	弹簧 SPRING	1	1				
3	4FP–E8177–00	限位杆螺栓 BOLT, STOPPER	1	1				
4	93101–12812	油封 OIL SEAL	1	1				
5	90508–32801	扭簧 SPRING, TORSION	1	1				
6	99002–10600	卡环 CLIP	1	1				
7	5VL–E8101–11	变速杆总成 SHIFT SHAFT ASSY	1	1				
8	93608–30839	定位销 PIN, DOWEL	1	1				
9	5VL–E8110–11	变挡踏板组合 SHIFT PEDAL ASSY	1	1				
10	1KL–E8113–00	. 变挡踏板套 .COVER, SHIFT PEDAL	1	1				
11	97022–06020	螺栓 BOLT	1	1				

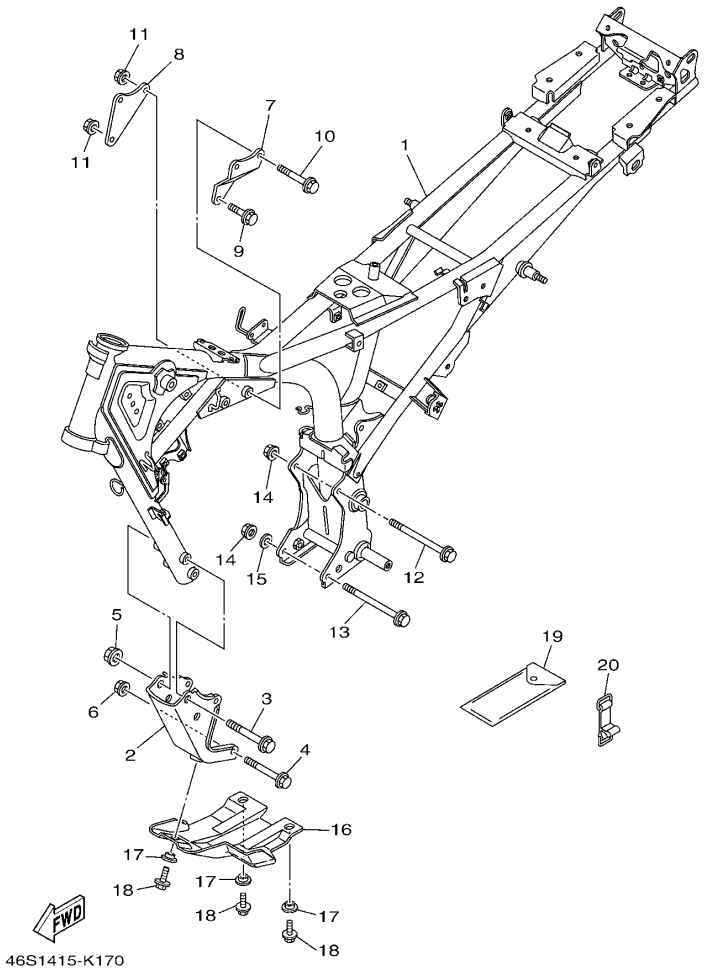

FIG. 17 车架 FRAME

参照号码	零件号码 PART NO.	零件名称 DESCRIPTION	46S1	46S2				备注 REMARKS
1	18C–F1110–00–33	车架组合 FRAME COMP.	1	1				雅马哈黑色, 浅紫深蓝色, 鸡尾酒鲜红色 1 车用 YB FOR DPBMC,VRC1
2	2B9–F1316–00	发动机支承 2 STAY, ENGINE 2	1	1				
3	95812–10080	凸缘螺栓 BOLT, FLANGE	2	2				
4	90105–08874	凸缘螺栓 BOLT, FLANGE	2	2				
5	90179–10807	螺母 NUT	2	2				
6	90179–08830	螺母 NUT	2	2				
7	5VL–F1317–00	发动机支承 3 STAY, ENGINE 3	1	1				
8	5VL–F1318–00	发动机支承 5 STAY, ENGINE 5	1	1				
9	90105–088E4	凸缘螺栓 BOLT, FLANGE	1	1				
10	90105–088E5	凸缘螺栓 BOLT, FLANGE	2	2				
11	90179–08830	螺母 NUT	3	3				
12	90105–08873	凸缘螺栓 BOLT, FLANGE	1	1				
13	90105–088E6	凸缘螺栓 BOLT, FLANGE	1	1				
14	90179–08830	螺母 NUT	2	2				
15	90201–08840	平垫圈 WASHER, PLATE	1	1				
16	2B9–F1471–00	发动机保护 PROTECTOR, ENGINE	1	1				
17	2B9–F1472–01	保护衬套 COLLAR, PROTECTOR	3	3				
18	95802–06012	凸缘螺栓 BOLT, FLANGE	3	3				
19	5VL–F8100–01	随车工具 TOOL KIT	1	1				
20	5VL–F811G–01	箍带 BAND	1	1				

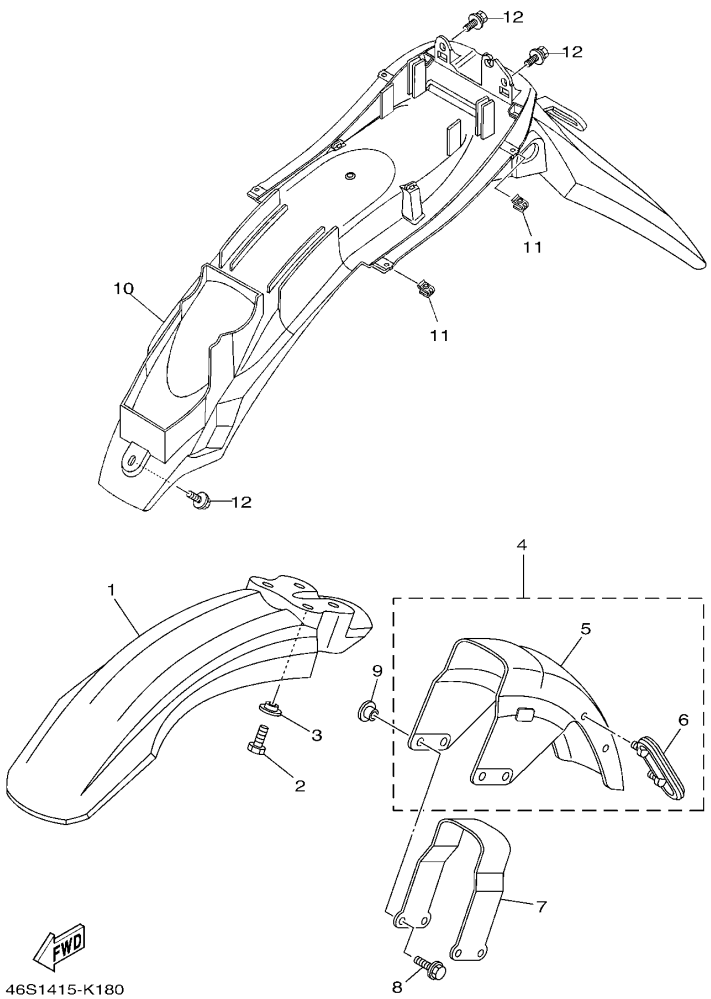

FIG. 18 挡泥板 FENDER

参照号码	零件号码 PART NO.	零件名称 DESCRIPTION	46S1	46S2				备注 REMARKS
1	2B9–F1511–00	前挡泥板 FENDER, FRONT	1					UR 浅紫深蓝色车用 UR FOR DPBMC
	2B9–F1511–10	前挡泥板 FENDER, FRONT	1					UR 鸡尾酒鲜红色 1 车用 UR FOR VRC1
2	97002–06016	螺栓 BOLT	4					
3	2B9–F1544–01	安装环 1 COLLAR 1	4					
4	2B9–Y2150–10	前挡泥板 2 FRONT FENDER ASSY	1					
5	2B9–F1502–10	. 前挡泥板组件 2 .FRONT FENDER ASSY 2	1					
6	5VL–F1518–01	. 钢索支架 .HOLDER, CABLE	1					
7	2B9–F1514–01	挡泥板支架 2 STAY, FENDER 2	1					
8	95822–06020	凸缘螺栓 BOLT, FLANGE	4					
9	2B9–F1544–01	安装环 1 COLLAR 1	4					
10	18C–F1611–00	后挡泥板 FENDER, REAR	1					
11	90183–05807	弹性螺母 NUT, SPRING	4					
12	90119–06869	带垫螺栓 BOLT, WITH WASHER	3					

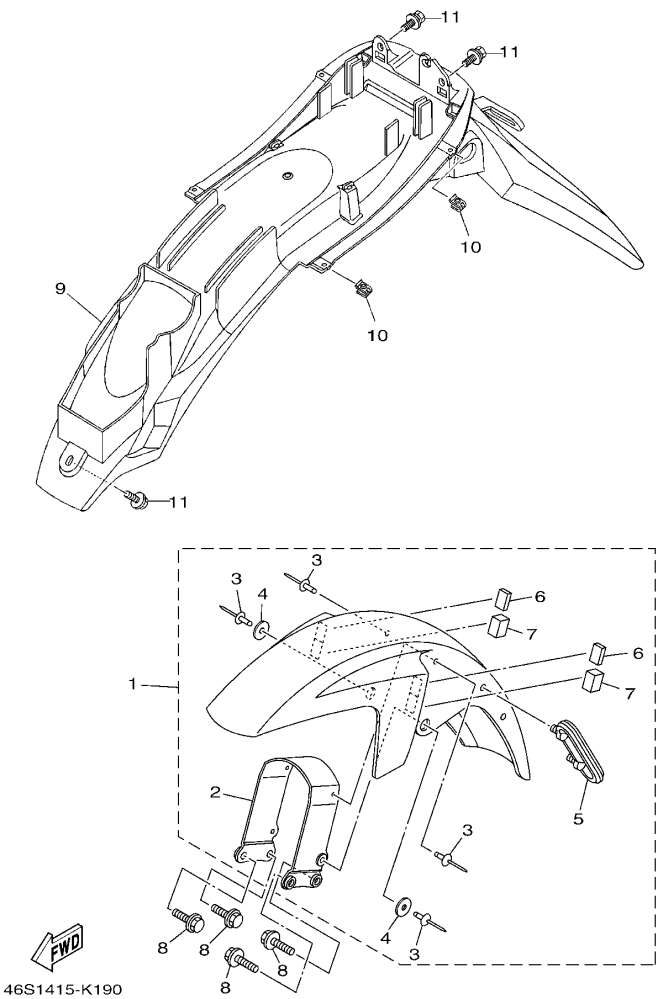

FIG. 19 挡泥板 2 FENDER 2

参照号码	零件号码 PART NO.	零件名称 DESCRIPTION	46S1	46S2				备注 REMARKS
1	2B9–Y2151–02–P0	前挡泥板 FRONT FENDER ASSY		1				UR 浅紫深蓝色车用 UR FOR DPBMC
	2B9–Y2151–02–P4	前挡泥板 FRONT FENDER ASSY		1				UR 鸡尾酒鲜红色 1 车用 UR FOR VRC1
2	2B9–F1513–01	. 挡泥板支架 1 .STAY, FENDER 1		1				
3	90267–48854	. 铆钉 .RIVET, BLIND		4				
4	90201–05811	. 平垫圈 .WASHER, PLATE		2				
5	5VL–F1518–01	. 钢索支架 .HOLDER, CABLE		1				
6	2B9–F1541–00	. 减震垫 1 .DAMPER 1		2				
7	2B9–F1542–00	. 减震器 2 .DAMPER 2		2				
8	95822–06016	凸缘螺栓 BOLT, FLANGE		4				
9	18C–F1611–00	后挡泥板 FENDER, REAR		1				
10	90183–05807	弹性螺母 NUT, SPRING		4				
11	90119–06869	带垫螺栓 BOLT, WITH WASHER		3				

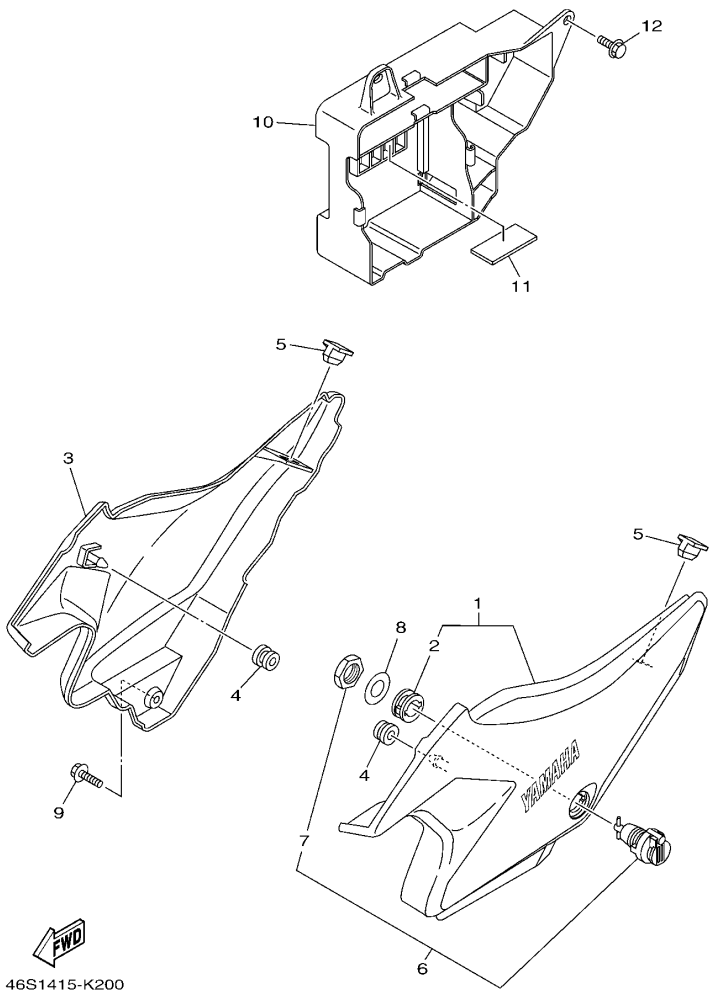

FIG. 20 侧盖 SIDE COVER

参照号码	零件号码 PART NO.	零件名称 DESCRIPTION	46S1	46S2				备注 REMARKS
1	18C–Y2171–05–P0	侧盖 1 COVER, SIDE 1	1	1				金属黑色 SMX
2	90480–24186	. 橡胶垫 .GROMMET	1	1				
3	18C–Y2172–05–P0	侧盖 2 COVER, SIDE 2	1	1				金属黑色 SMX
4	90480–13837	橡胶垫 GROMMET	2	2				
5	5VL–F1778–00	定位减震器 1 DAMPER, LOCATING 1	2	2				
6	5VL–F1780–01	锁紧装置组合 LOCK ASSY	1	1				
7	90170–22850	. 螺母 .NUT	1	1				
8	90201–228F6	平垫圈 WASHER, PLATE	1	1				
9	90119–06869	带垫螺栓 BOLT, WITH WASHER	1	1				
10	18C–F177G–00	蓄电池盒 BOX, BATTERY	1	1				
11	5VL–F1746–00	减震垫 DAMPER	1	1				
12	90119–06811	带垫螺栓 BOLT, WITH WASHER	3	3				

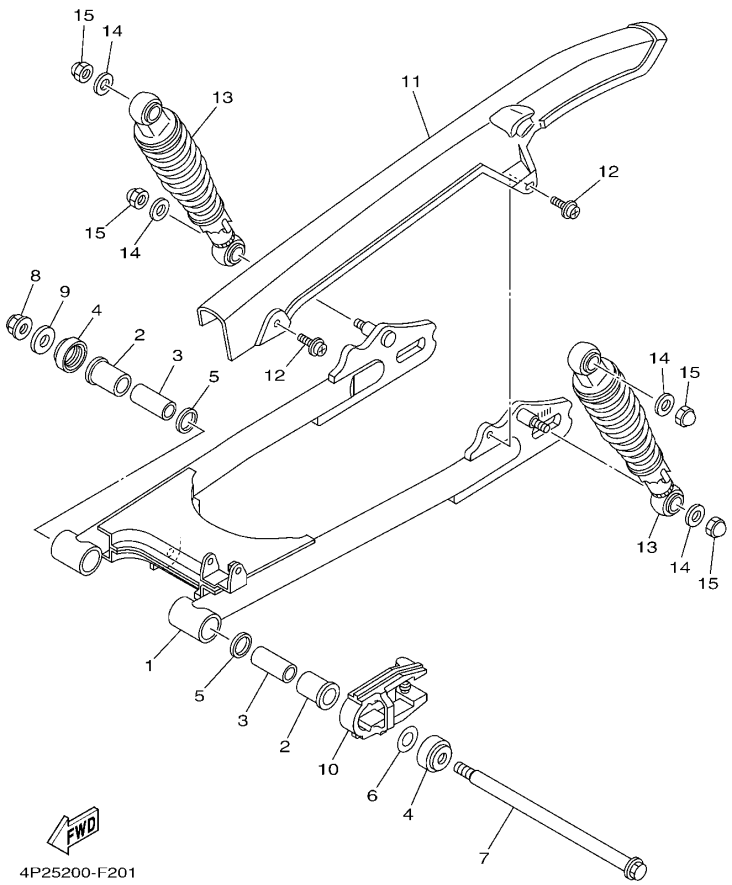

FIG. 21 后臂・悬挂 REAR ARM & SUSPENSION

参照号码	零件号码 PART NO.	零件名称 DESCRIPTION	46S1	46S2				备注 REMARKS
1	5VL–F2110–00–33	后臂组合 REAR ARM COMP.	1	1				雅马哈黑色, 浅紫深蓝色, 鸡尾酒鲜红色 1 车用 YB FOR DPBMC,VRC1
2	90386–18801	衬套 BUSH	2	2				
3	5VL–F2123–00	衬套 1 BUSH 1	2	2				
4	5VL–F2128–01	推力盖 1 COVER, THRUST 1	2	2				
5	93109–18802	油封 OIL SEAL	2	2				
6	5VL–F2127–00	垫片 SHIM	1	1				
7	5VL–F2141–01	后臂转轴 SHAFT, PIVOT	1	1				
8	95602–12200	自锁螺母 NUT, SELF-LOCKING	1	1				
9	90201–12819	平垫圈 WASHER, PLATE	1	1				
10	5VL–F2151–10	链条保护套 SEAL, GUARD	1	1				
11	5VL–F2311–00	链盒 CASE, CHAIN	1	1				
12	90159–06830	带垫螺钉 SCREW, WITH WASHER	2	2				
13	5VL–F2210–01	后减震器组合 SHOCK ABSORBER ASSY, REAR	2	2				
14	90201–108C7	平垫圈 WASHER, PLATE	4	4				
15	90176–10810	盖型螺母 NUT, CROWN	4	4				

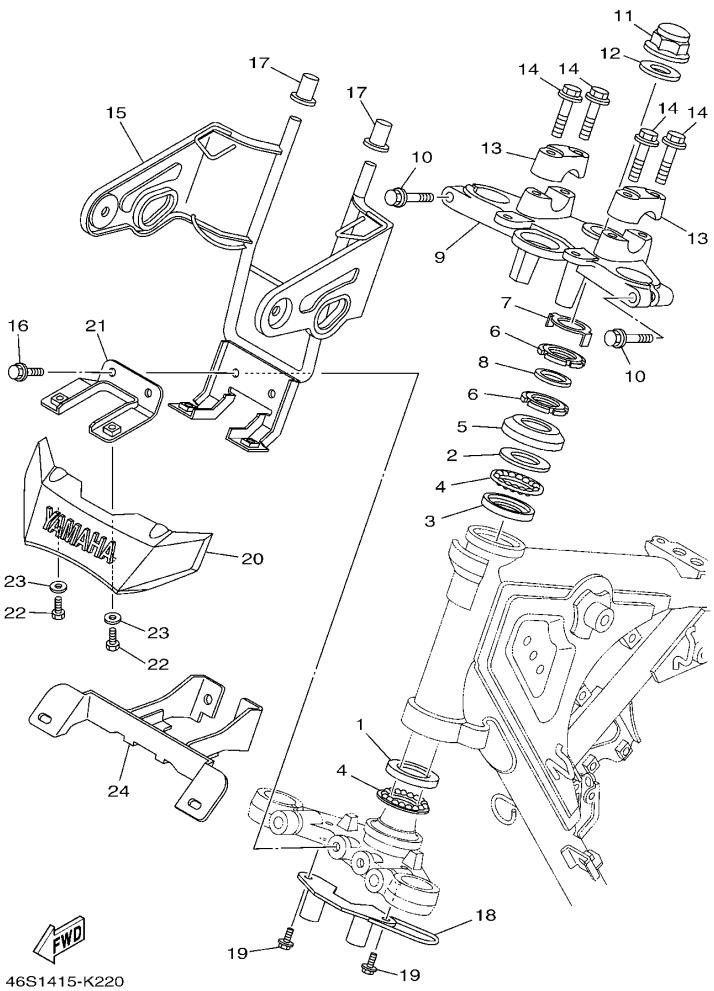

FIG. 22 操纵系统 STEERING

参照号码	零件号码 PART NO.	零件名称 DESCRIPTION	46S1	46S2				备注 REMARKS
1	1KL–F3412–00	滚珠座圈 2 RACE, BALL 2	1					
2	4FP–F3411–00	滚珠座圈 1 RACE, BALL 1	1					
3	4FP–F3412–00	滚珠座圈 2 RACE, BALL 2	1					
4	5VL–F341E–00	保持架 RETAINER, BALL BEARING	2					
5	4GU–F3416–00	滚珠座圈盖 2 COVER, BALL RACE 2	1					
6	90179–25806	螺母 NUT	2					
7	5VL–F3418–01	专用垫圈 WASHER, SPECIAL	1					
8	90202–26142	平垫圈 WASHER, PLATE	1					
9	5VL–F3435–00–33	手把座 CROWN, HANDLE	1					雅马哈黑色 浅紫深蓝色, 鸡尾酒鲜红色 1 车用 YB FOR DPBMC,VRC1
10	95022–08040	凸缘螺栓 BOLT, FLANGE	2					
11	90176–22801	盖型螺母 NUT, CROWN	1					
12	5VL–F3165–01	垫圈 WASHER, FELT	1					
13	5VL–F3441–00	手把上夹持器 HOLDER, HANDLE UPPER	2					
14	95022–08035	凸缘螺栓 BOLT, FLANGE	4					
15	46S–F3174–00	前照灯支承 STAY, HEADLIGHT	1					
16	95822–06016	凸缘螺栓 BOLT, FLANGE	2					
17	4FP–F317J–00	减震套 1 DAMPER 1	2					
18	2B9–F3389–00	钢索导框 GUIDE, CABLE	1					
19	95822–06012	凸缘螺栓 BOLT, FLANGE	2					
20	2B9–F3395–00	标牌 EMBLEM	1					
21	2B9–F334G–11	支承 1 BRACKET 1	1					
22	97002–05012	螺栓 BOLT	2					
23	90201–05802	平垫圈 WASHER, PLATE	2					
24	2B9–F1581–00	前牌照安装板 1 STAY, PLATE FITTING 1	1					

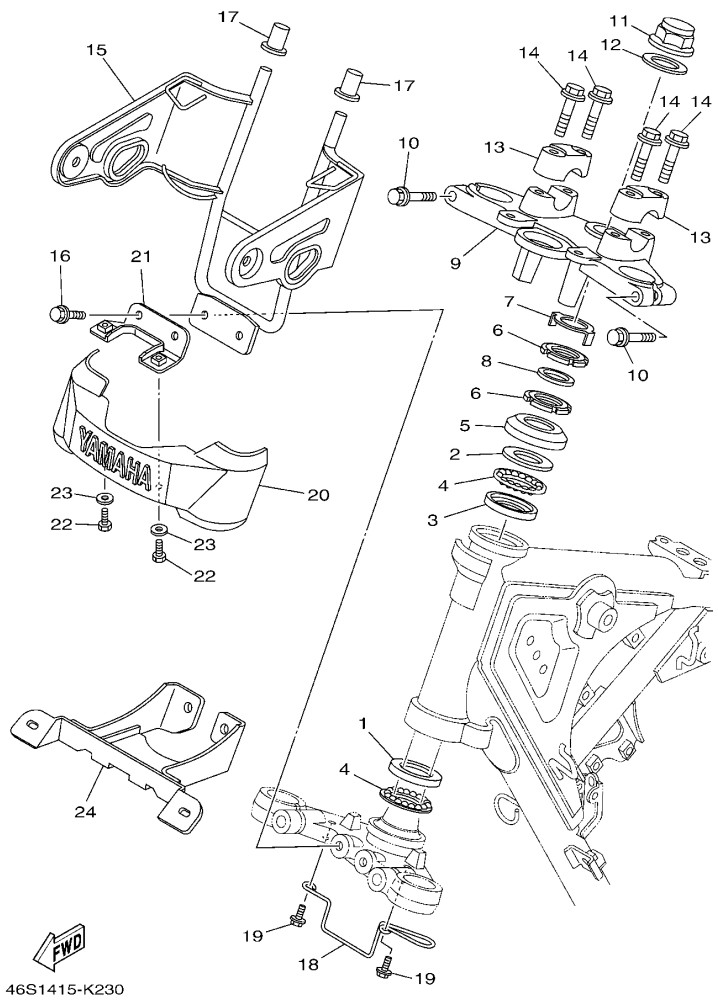

FIG. 23 操纵系统 2 STEERING 2

参照号码	零件号码 PART NO.	零件名称 DESCRIPTION	46S1	46S2				备注 REMARKS
1	1KL–F3412–00	滚珠座圈 2 RACE, BALL 2		1				
2	4FP–F3411–00	滚珠座圈 1 RACE, BALL 1		1				
3	4FP–F3412–00	滚珠座圈 2 RACE, BALL 2		1				
4	5VL–F341E–00	保持架 RETAINER, BALL BEARING		2				
5	4GU–F3416–00	滚珠座圈盖 2 COVER, BALL RACE 2		1				
6	90179–25806	螺母 NUT		2				
7	5VL–F3418–01	专用垫圈 WASHER, SPECIAL		1				
8	90202–26142	平垫圈 WASHER, PLATE		1				
9	5VL–F3435–00–33	手把座 CROWN, HANDLE		1				雅马哈黑色 浅紫深蓝色, 鸡尾酒鲜红色 1 车用 YB FOR DPBMC,VRC1
10	95022–08040	凸缘螺栓 BOLT, FLANGE		2				
11	90176–22801	盖型螺母 NUT, CROWN		1				
12	5VL–F3165–01	垫圈 WASHER, FELT		1				
13	5VL–F3441–00	手把上夹持器 HOLDER, HANDLE UPPER		2				
14	95022–08035	凸缘螺栓 BOLT, FLANGE		4				
15	46S–F3174–10	前照灯支承 STAY, HEADLIGHT		1				
16	95822–06016	凸缘螺栓 BOLT, FLANGE		2				
17	4FP–F317J–00	减震套 1 DAMPER 1		2				
18	18C–F3389–00	钢索导框 GUIDE, CABLE		1				
19	95822–06012	凸缘螺栓 BOLT, FLANGE		2				
20	4FP–F3395–10	标牌 EMBLEM		1				
21	5VL–F334G–11	支承 1 BRACKET 1		1				
22	97002–05012	螺栓 BOLT		2				
23	90201–05802	平垫圈 WASHER, PLATE		2				
24	5VL–F1581–00	前牌照安装板 1 STAY, PLATE FITTING 1		1				

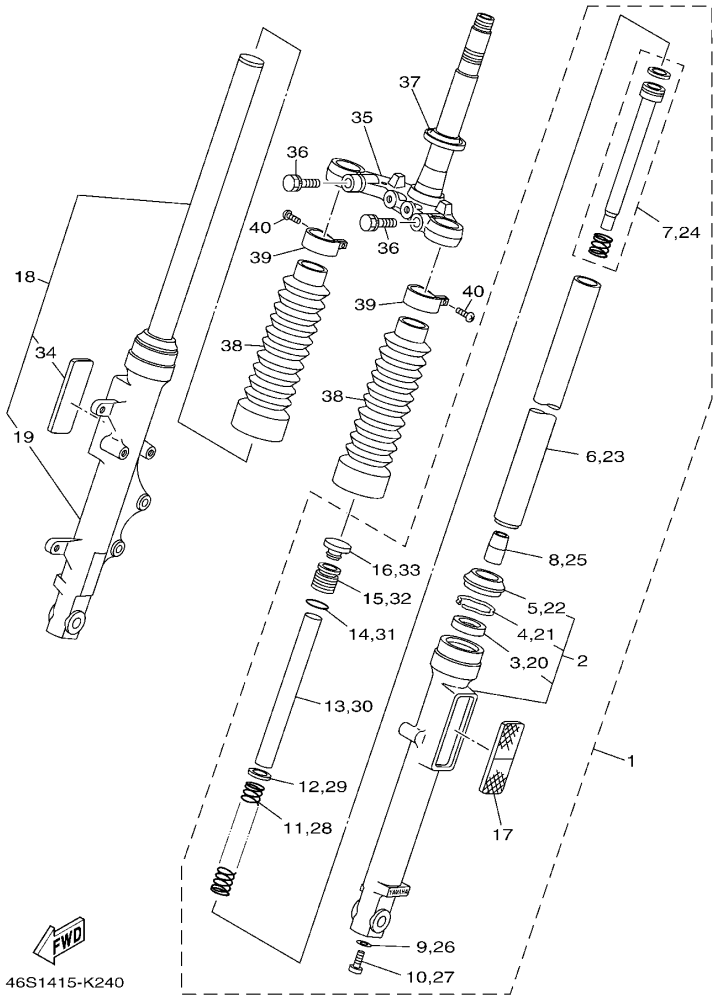

FIG. 24 前叉 FRONT FORK

参照号码	零件号码 PART NO.	零件名称 DESCRIPTION	46S1	46S2				备注 REMARKS
1	46S–F3102–00	前叉组合(左边) FRONT FORK ASSY (L.H)	1	1				
2	2B9–F3106–20	. 外管组件(左边) .OUTER TUBE COMP.	1	1				
3	4GU–F3145–00	. . 油封 ..OIL SEAL	1	1				
4	5AP–F3153–00	. . 扣环 ..RING, SNAP	1	1				
5	4GU–F3144–00	. . 防尘罩 ..SEAL, DUST	1	1				
6	46S–F3110–00	. 内管组件 1 .INNER TUBE COMP.1	1	1				
7	5VL–F3170–01	. 前叉气缸组合 .CYLINDER COMP., FRONT FORK	1	1				
8	4GU–F3173–01	. 锥形主轴 .SPINDLE, TAPER	1	1				
9	4TU–F3479–00	. 衬垫 .GASKET	1	1				
10	5LK–F3356–01	. 螺栓 2 .BOLT 2	1	1				
11	5VL–F3141–40	. 前叉弹簧 .SPRING, FRONT FORK	1	1				
12	5AP–F3427–00	. 垫圈 .WASHER	1	1				
13	2B9–F3118–00	. 衬套 .SPACER	1	1				
14	5AP–F3147–00	. 0 型环 .O-RING	1	1				
15	5VL–F3111–20	. 顶盖螺栓 .BOLT, CAP	1	1				
16	5VL–F3154–00	. 支承轴 .CAP	1	1				
17	5VL–H5110–01	. 反射镜组合 .REFLECTOR ASSY	1	1				
18	46S–F3103–00	前叉组合(右边) FRONT FORK ASSY (R.H)	1	1				
19	2B9–F3107–20	. 外管组件(右边) .OUTER TUBE COMP. (R.H)	1	1				
20	4GU–F3145–00	. . 油封 ..OIL SEAL	1	1				
21	5AP–F3153–00	. . 扣环 ..RING, SNAP	1	1				
22	4GU–F3144–00	. . 防尘罩 ..SEAL, DUST	1	1				
23	46S–F3110–00	. 内管组件 1 .INNER TUBE COMP.1	1	1				
24	5VL–F3170–01	. 前叉气缸组合 .CYLINDER COMP., FRONT FORK	1	1				
25	4GU–F3173–01	. 锥形主轴 .SPINDLE, TAPER	1	1				
26	4TU–F3479–00	. 衬垫 .GASKET	1	1				
27	5LK–F3356–01	. 螺栓 2 .BOLT 2	1	1				

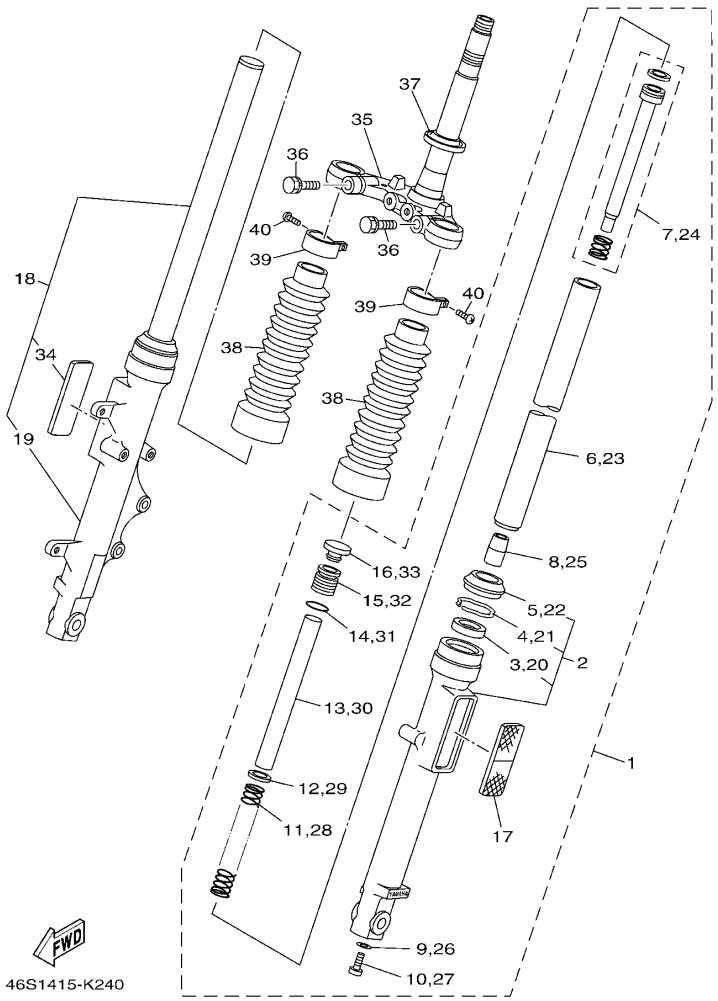

FIG. 24 前叉 FRONT FORK

参照号码	零件号码 PART NO.	零件名称 DESCRIPTION	46S1	46S2				备注 REMARKS
28	5VL–F3141–40	. 前叉弹簧 .SPRING, FRONT FORK	1	1				
29	5AP–F3427–00	. 垫圈 .WASHER	1	1				
30	2B9–F3118–00	. 衬套 .SPACER	1	1				
31	5AP–F3147–00	. 0 型环 .O-RING	1	1				
32	5VL–F3111–20	. 顶盖螺栓 .BOLT, CAP	1	1				
33	5VL–F3154–00	. 支承轴 .CAP	1	1				
34	5VL–H5110–01	. 反射镜组合 .REFLECTOR ASSY	1	1				
35	5VL–F3340–01	底托架组 UNDER BRACKET COMP.	1	1				
36	5VL–F3346–01	螺栓 1 BOLT 1	2	2				
37	4FP–F3411–10	滚珠座圈 1 RACE, BALL 1	1	1				
38	2B9–F3191–00	保护罩 BOOT	2	2				
39	2B9–F3192–01	带箍 BAND	2	2				
40	95802–04016	凸缘螺栓 BOLT, FLANGE	2	2				

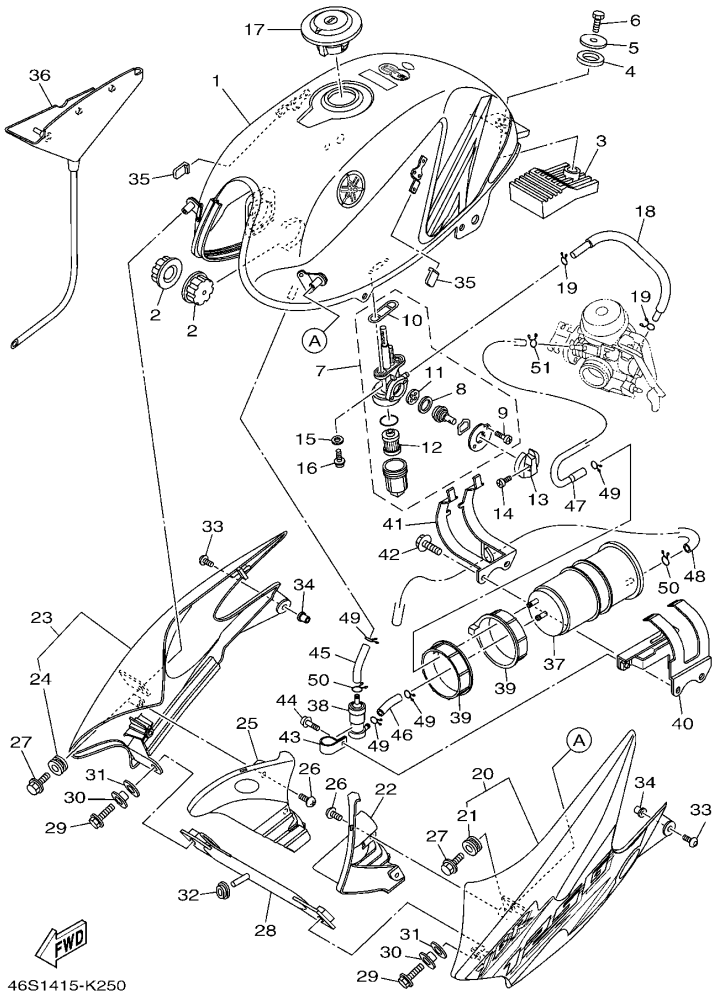

FIG. 25 油箱 FUEL TANK

参照号码	零件号码 PART NO.	零件名称 DESCRIPTION	46S1	46S2				备注 REMARKS
1	18C–W2411–00–P3	油箱组合 FUEL TANK ASSY	1	1				UR 浅紫深蓝色车用 UR FOR DPBMC
	18C–W2411–00–P4	油箱组合 FUEL TANK ASSY	1	1				UR 鸡尾酒鲜红色 1 车用 UR FOR VRC1
2	4FP–F4181–00	定位减震器 1 DAMPER, LOCATING 1	2	2				
3	5VL–F4183–00	定位减震器 3 DAMPER, LOCATING 3	1	1				
4	5VL–F4182–00	定位减震器 2 DAMPER, LOCATING 2	1	1				
5	90201–088P2	平垫圈 WASHER, PLATE	1	1				
6	97002–08016	螺栓 BOLT	1	1				
7	5VL–F4500–00	燃油开关组合 1 FUEL COCK ASSY 1	1	1				
8	5VL–F4534–00	. 油封 .SEAL, COCK	1	1				
9	97880–03008	. 大柱头螺钉 .SCREW, PAN HEAD	2	2				
10	5VL–F4512–00	. 密封垫 .GASKET	1	1				
11	5VL–F4523–00	. 阀 .VALVE	1	1				
12	5VL–F4515–00	. 滤网 2 .NET, FILTER 2	1	1				
13	5VL–F4524–01	开关 LEVER, COCK	1	1				
14	90157–03800	大柱头螺钉 SCREW, PAN HEAD	1	1				
15	90159–06820	带垫螺钉 SCREW, WITH WASHER	2	2				
16	90430–05800	衬垫 GASKET	2	2				
17	18C–F4610–01	油箱盖总成 CAP ASSY	1	1				
18	5VL–F4311–00	燃油管 1 PIPE, FUEL 1	1	1				
19	90467–09854	卡环 CLIP	2	2				
20	18C–W137W–00–P3	导流罩 1 SCOOP, AIR 1	1	1				UR 浅紫深蓝色车用 UR FOR DPBMC
	18C–W137W–00–P4	导流罩 1 SCOOP, AIR 1	1	1				UR 鸡尾酒鲜红色 1 车用 UR FOR VRC1
21	90480–15878	. 橡胶垫 .GROMMET	1	1				
22	18C–F137U–00	通风盖 1 GUIDE, AIR 1	1	1				
23	18C–W137X–00–P5	导流罩 2 SCOOP, AIR 2	1	1				UR 浅紫深蓝色车用 UR FOR DPBMC
	18C–W137X–00–P6	导流罩 2 SCOOP, AIR 2	1	1				UR 鸡尾酒鲜红色 1 车用 UR FOR VRC1
24	90480–15878	. 橡胶垫 .GROMMET	1	1				

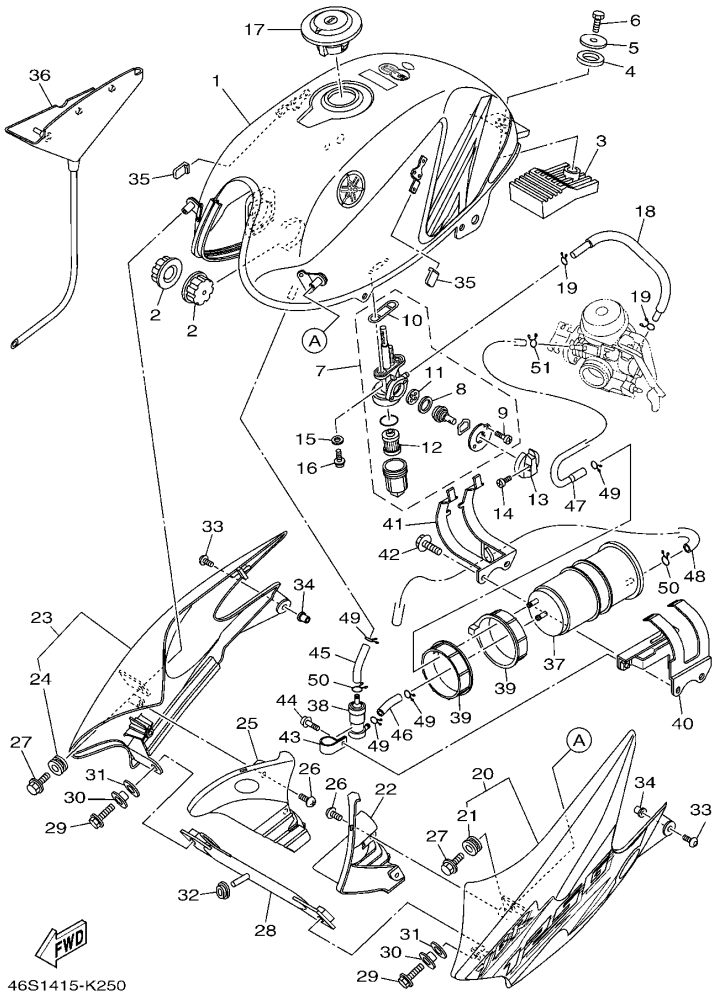

FIG. 25 油箱 FUEL TANK

参照号码	零件号码 PART NO.	零件名称 DESCRIPTION	46S1	46S2				备注 REMARKS
25	18C–F137V–00	通风盖 2 GUIDE, AIR 2	1	1				
26	97702–50016	自攻螺钉 SCREW, TAPPING	4	4				
27	95802–06012	凸缘螺栓 BOLT, FLANGE	2	2				
28	18C–F4216–00	支承 STAY	1	1				
29	95802–06020	凸缘螺栓 BOLT, FLANGE	2	2				
30	90387–06879	轴套 COLLAR	2	2				
31	90202–09800	平垫圈 WASHER, PLATE	2	2				
32	90480–01868	橡胶垫 GROMMET	1	1				
33	90111–05803	六角螺栓 BOLT,HEX. SOCKET BUTTON	2	2				
34	90179–05523	螺母 NUT	2	2				
35	12B–F411J–00	侧盖减震垫 DAMPER, SIDE COVER	2	2				
36	18C–F4217–00	盖 COVER	1	1				
37	18C–F4170–00	过滤缸总成 CANISTER ASSY	1	1				
38	18C–F4180–00	滚动阀组合 ROLL OVER VALVE ASSY	1	1				
39	18C–F483H–00	箍带 BAND	2	2				
40	18C–F115R–01	过滤罐支承 BRACKET, CANISTER	1	1				
41	18C–F134X–01	过滤罐支承 BRACKET, CANISTER	1	1				
42	95802–06012	凸缘螺栓 BOLT, FLANGE	2	2				
43	90461–15801	夹箍 CLAMP	1	1				
44	97602–05212	带垫圈大柱头螺钉 SCREW, PAN HEAD WITH WASHER	1	1				
45	18C–F4312–00	管 2 PIPE 2	1	1				
46	18C–F4313–00	管 3 PIPE 3	1	1				
47	18C–F4314–00	管 4 PIPE 4	1	1				
48	18C–F4315–00	管 5 PIPE 5	1	1				
49	90467–09006	卡环 CLIP	4	4				
50	90467–10008	卡环 CLIP	2	2				
51	90467–07029	卡环 CLIP	1	1				

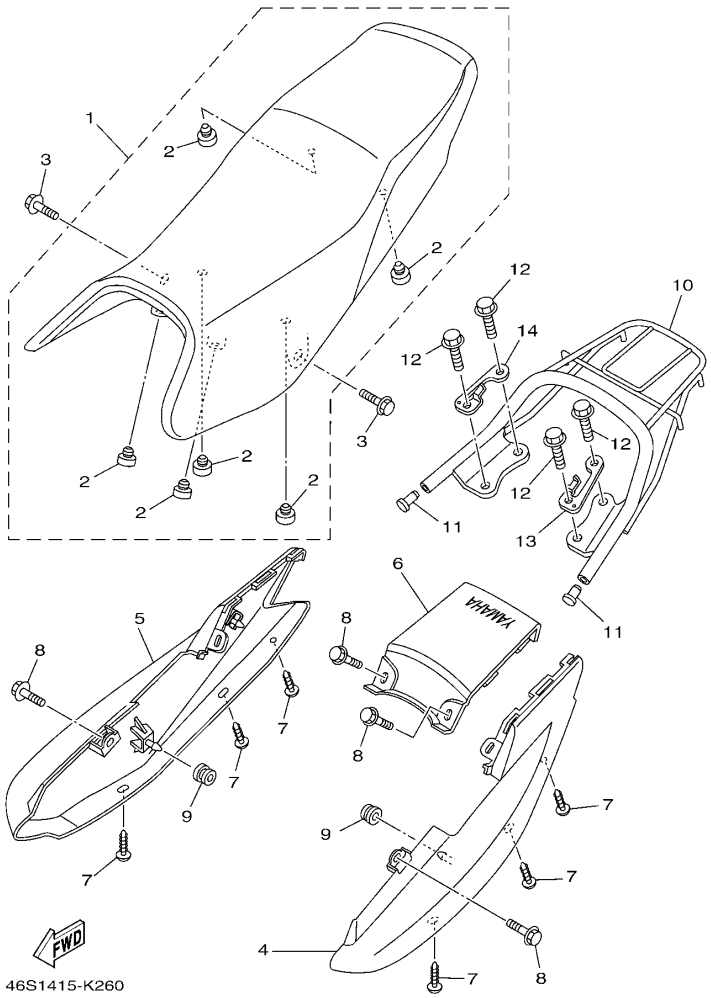

FIG. 26 座位 SEAT

参照号码	零件号码 PART NO.	零件名称 DESCRIPTION	46S1	46S2				备注 REMARKS
1	18C–F4730–01	双人座垫组合 DOUBLE SEAT ASSY	1	1				
2	4TU–F4741–00	. 缓冲座 .PAD, SEAT	6	6				
3	90119–06869	带垫螺栓 BOLT, WITH WASHER	2	2				
4	18C–F471K–00–P5	尾罩 1 COVER, TAIL 1	1	1				UR 浅紫深蓝色车用 UR FOR DPBMC
	18C–F471K–00–P6	尾罩 1 COVER, TAIL 1	1	1				UR 鸡尾酒鲜红色 1 车用 UR FOR VRC1
5	18C–F472K–00–P5	尾罩 2 COVER, TAIL 2	1	1				UR 浅紫深蓝色车用 UR FOR DPBMC
	18C–F472K–00–P6	尾罩 2 COVER, TAIL 2	1	1				UR 鸡尾酒鲜红色 1 车用 UR FOR VRC1
6	18C–Y2475–00–P5	尾罩 COVER, TAIL ASSY	1	1				UR 浅紫深蓝色车用 UR FOR DPBMC
	18C–Y2475–00–P6	尾罩 COVER, TAIL ASSY	1	1				UR 鸡尾酒鲜红色 1 车用 UR FOR VRC1
7	97702–50012	自攻螺钉 SCREW, TAPPING	6	6				
8	90119–06869	带垫螺栓 BOLT, WITH WASHER	4	4				
9	90480–01868	橡胶垫 GROMMET	2	2				
10	51P–F4773–00	后货架组合 HANDLE, SEAT	1	1				
11	90338–16148	塞 PLUG	2	2				
12	95812–08020	凸缘螺栓 BOLT, FLANGE	4	4				
13	18C–F474K–01	支承 3 STAY 3	1	1				
14	18C–F474L–01	支承 4 STAY 4	1	1				

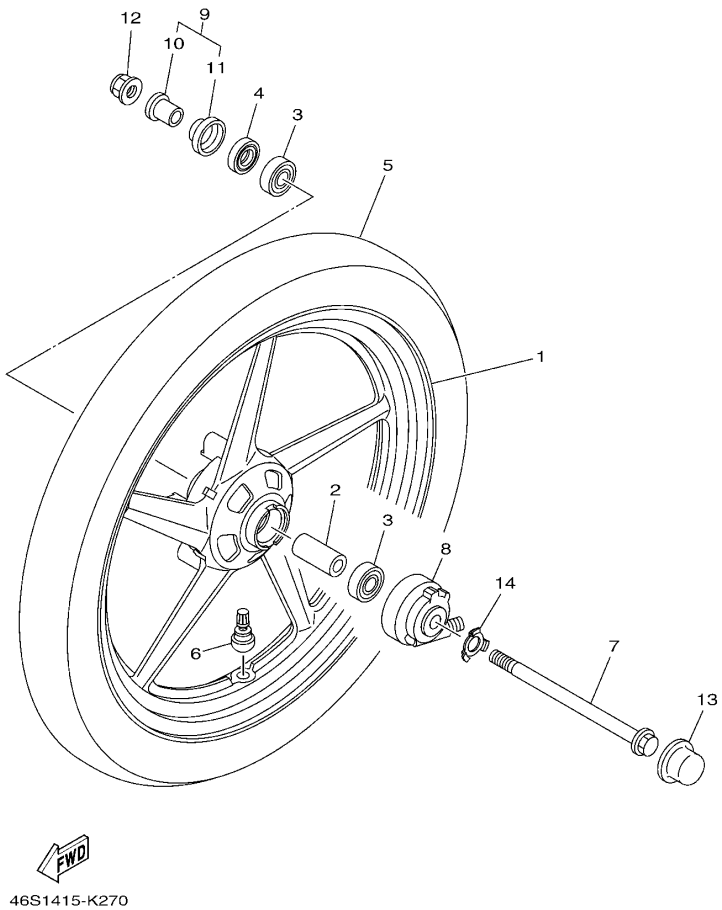

FIG. 27 前轮 FRONT WHEEL

参照号码	零件号码 PART NO.	零件名称 DESCRIPTION	46S1	46S2				备注 REMARKS
1	3D9–F5168–00–33	前压铸轮 CAST WHEEL, FRONT	1	1				雅马哈黑色 浅紫深蓝色,鸡尾酒鲜红色 1 车用 YB FOR DPBMC,VRC1
2	90560–15293	衬套 SPACER	1	1				
3	93306–202Y4	轴承 BEARING	2	2				
4	93102–20857	油封 OIL SEAL	1	1				
5	94130–18822	轮胎（3. 00–18 C7204F 47P TL） TIRE (3.00-18 C7204F 47P TL)	1	1				CHENG SHIN
6	93900–00826	气门嘴 VALVE, RIM TR413	1	1				
7	5VL–F5181–11	前轮轮轴 AXLE, WHEEL	1	1				
8	4GU–F5190–11	齿轮装置组合 GEAR UNIT ASSY	1	1				
9	4GU–F511X–01	轴套组 COLLAR	1	1				
10	90387–158K1	. 轴套 .COLLAR	1	1				
11	4GU–F5118–00	. 轮毂防尘盖 .COVER, HUB DUST	1	1				
12	90185–14806	自锁螺母 NUT, SELF-LOCKING	1	1				
13	3D9–F5188–00	盖 CAP	1	1				
14	90209–16802	垫圈 WASHER	1	1				

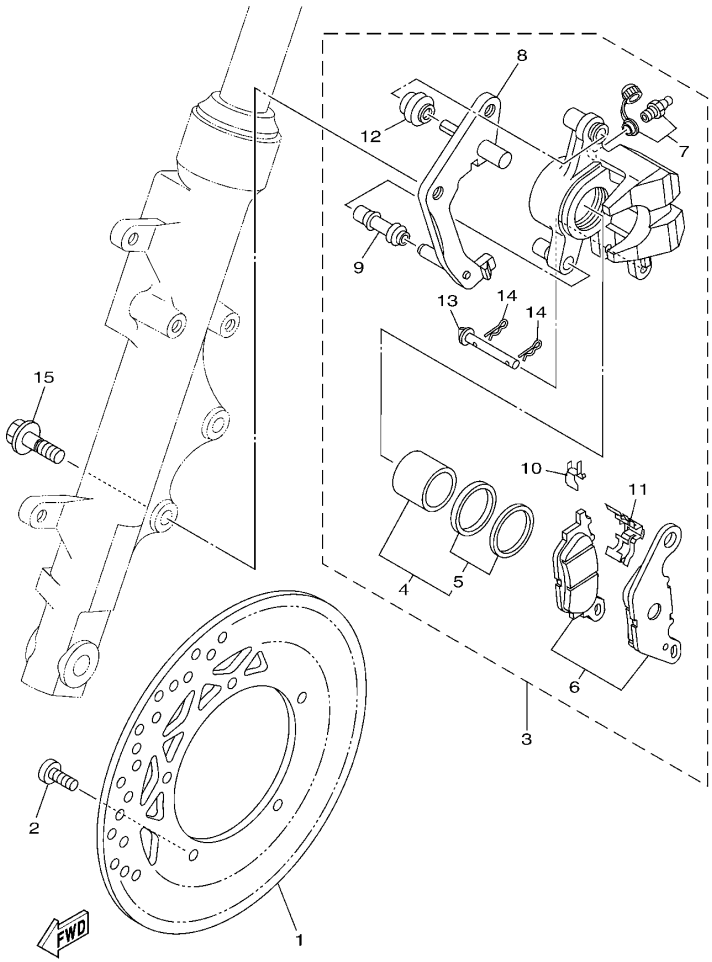

13R6415-H270

FIG. 28 前制动器卡钳 FRONT BRAKE CALIPER

参照号码	零件号码 PART NO.	零件名称 DESCRIPTION	46S1	46S2				备注 REMARKS
1	3D9–F582U–00	制动盘(右边) DISK, BRAKE (RIGHT)	1	1				
2	90111–08805	六角螺栓 BOLT,HEX. SOCKET BUTTON	5	5				
3	3D9–F580U–01	制动器卡钳组合(右边) CALIPER ASSY (RIGHT)	1	1				
4	4S5–W0057–00	. 卡钳活塞组合 .PISTON ASSY, CALIPER	1	1				
5	4S5–W0047–00	. . 卡钳密封套件 ..CALIPER SEAL KIT	1	1				
6	4S5–W0045–00	. 刹车片组合 .BRAKE PAD KIT	1	1				
7	4S5–W0048–01	. 带孔螺钉套件 .BLEED SCREW KIT	1	1				
8	4S5–F5921–01	. 支承托架 .BRACKET, SUPPORT	1	1				
9	4S5–F5937–00	. 保护罩 2 .BOOT 2	1	1				
10	4S5–F5939–00	. 扣片 .CLIP, PAD	1	1				
11	4S5–F5919–00	. 衬垫支承 .SUPPORT, PAD	1	1				
12	4S5–F5917–00	. 卡钳套 .BOOT, CALIPER	1	1				
13	4S5–F5924–01	. 刹车片销 .PIN, PAD	1	1				
14	4S5–F5925–00	. 卡环 .CLIP	2	2				
15	90105–10831	凸缘螺栓 BOLT, FLANGE	2	2				

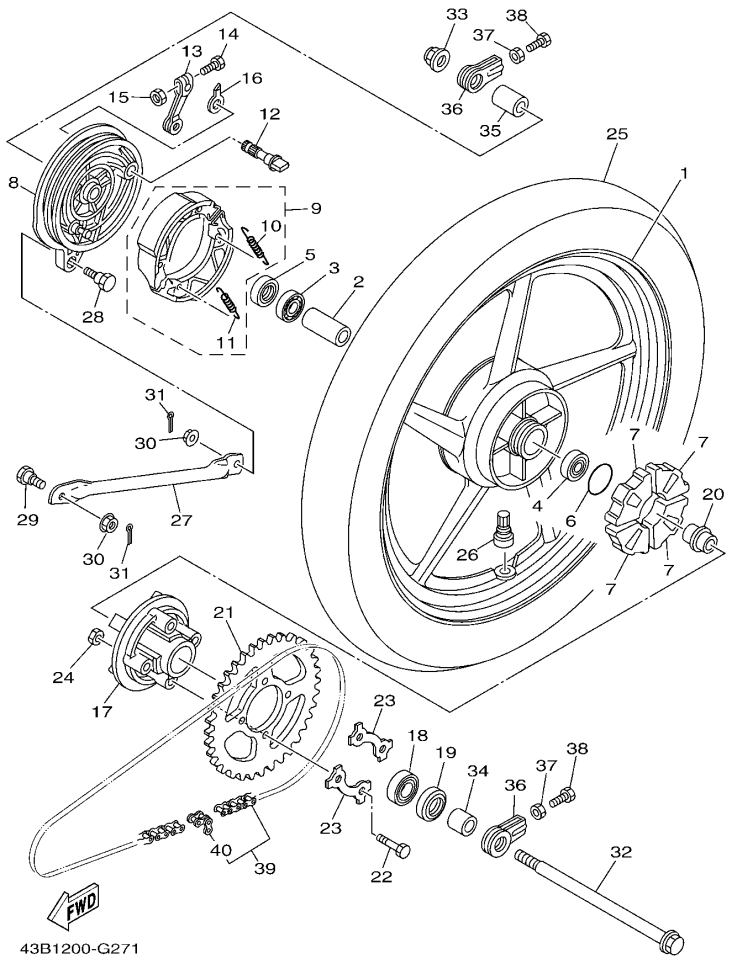

FIG. 29 后轮 REAR WHEEL

参照号码	零件号码 PART NO.	零件名称 DESCRIPTION	46S1	46S2				备注 REMARKS
1	3D9–F5338–00–33	后压铸轮 CAST WHEEL, REAR	1	1				雅马哈黑色 浅紫深蓝色 鸡尾酒鲜红色 1 车用 YB FOR DPBMC,VRC1
2	90387–15809	轴套 COLLAR	1	1				
3	93306–202Y4	轴承 BEARING	1	1				
4	93306–252X5	轴承 BEARING	1	1				
5	93104–22802	油封 OIL SEAL	1	1				
6	93210–42807	0 型环 O-RING	1	1				
7	1KL–F5364–00	减震垫 DAMPER	4	4				
8	5VL–F5321–01–33	后制动盖 PLATE, BRAKE SHOE	1	1				雅马哈黑色 浅紫深蓝色 鸡尾酒鲜红色 1 车用 YB FOR DPBMC,VRC1
9	5VL–W2533–21	制动蹄块总成 BRAKE SHOE SET	1	1				
10	90506–12801	. 拉簧 .SPRING, TENSION	1	1				
11	90506–15802	. 拉簧 .SPRING, TENSION	1	1				
12	4GU–F5351–02	凸轮轴 CAMSHAFT	1	1				
13	5VL–F5355–01	制动臂 1 LEVER, CAMSHAFT	1	1				
14	90101–06848	螺栓 BOLT	1	1				
15	95302–06600	螺母 NUT	1	1				
16	4GU–F533A–01	指示片 PLATE, INDICATOR	1	1				
17	5VL–F5366–00	轮毂离合器 CLUTCH, HUB	1	1				
18	93306–004YL	轴承 BEARING	1	1				
19	93106–26804	油封 OIL SEAL	1	1				
20	5VL–F5387–01	链轮轮轴 AXLE, SPROCKET	1	1				
21	5VL–F5445–01	大链轮 SPROCKET, DRIVEN (45T)	1	1				
22	90109–08864	螺栓 BOLT	4	4				
23	5LK–F5412–01	垫片 WASHER	2	2				
24	90179–08639	螺母 NUT	4	4				
25	94109–18812	轮胎（90/90–18 C7204R 57P TL） TIRE (90/90-18 C7204R 57P TL)	1	1				
26	93900–00826	气门嘴 VALVE, RIM TR413	1	1				
27	5VL–F5371–00	拉杆 BAR, TENSION	1	1				

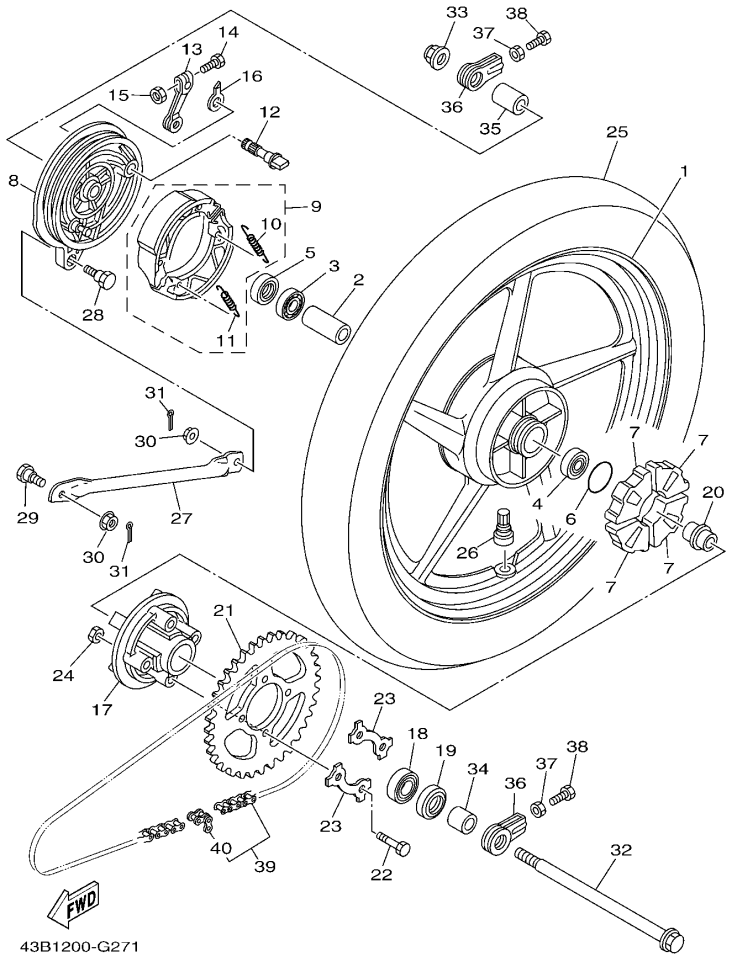

FIG. 29 后轮 REAR WHEEL

参照号码	零件号码 PART NO.	零件名称 DESCRIPTION	46S1	46S2				备注 REMARKS
28	90109–08847	螺栓 BOLT	1	1				
29	90109–08848	螺栓 BOLT	1	1				
30	95702–08500	螺母 NUT, FLANGE	2	2				
31	91402–20012	开口销 PIN, COTTER	2	2				
32	5VL–F5381–01	后轮轮轴 AXLE, WHEEL	1	1				
33	95602–14200	自锁螺母 NUT, SELF-LOCKING	1	1				
34	5VL–F5386–01	链轮轴安装套 COLLAR, SPROCKET AXLE	1	1				
35	5VL–F5377–01	轴套 COLLAR, WHEEL	1	1				
36	5VL–F5388–01	链条张紧板 1 PULLER, CHAIN 1	2	2				
37	95312–08600	螺母 NUT	2	2				
38	90153–08804	六角头螺钉 SCREW, HEXAGON	2	2				
39	5VL–F53C0–00	链条总成 CHAIN (DID428 98LL)	1	1				
40	94668–83001	. 链条接头 .JOINT, CHAIN (DID 428)	1	1				

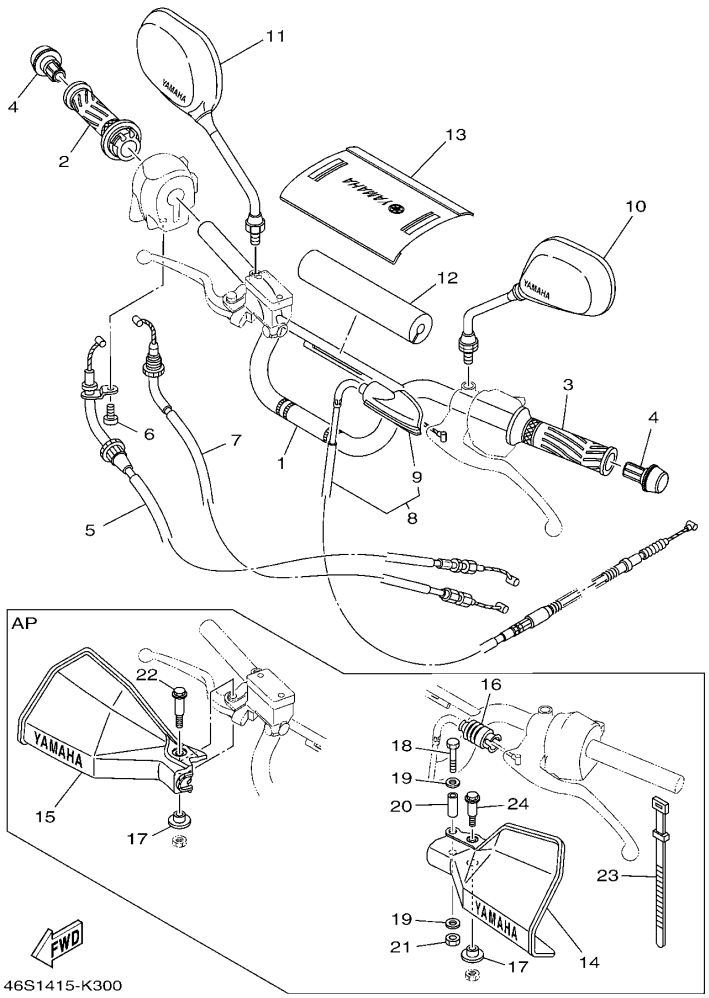

FIG. 30 操纵手柄・钢索 STEERING HANDLE & CABLE

参照号码	零件号码 PART NO.	零件名称 DESCRIPTION	46S1	46S2				备注 REMARKS
1	2B9–F6111–10	手把 HANDLEBAR	1	1				
2	18C–F6240–00	握把（右边） GRIP ASSY	1	1				
3	5VL–F6241–10	握把（左边） GRIP	1	1				
4	5VL–F628J–10	握把盖 CAP, GRIP	2	2				
5	46S–F6311–00	节气门拉索 1 CABLE, THROTTLE 1	1	1				
6	98502–05010	十字螺钉 SCREW, PAN HEAD	1	1				
7	46S–F6312–00	节气门拉索 2 CABLE, THROTTLE 2	1	1				
8	2B9–F6335–11	离合器拉索 CABLE, CLUTCH	1	1				
9	5VL–F6372–01	. 手柄套 1 .COVER, HANDLE LEVER 1	1	1				
10	5VL–F6280–12	后视镜组合（左边） REAR VIEW MIRROR ASSY (LEFT)	1	1				
11	5VL–F6290–12	后视镜组合（右边） REAR VIEW MIRROR ASSY (RIGHT)	1	1				
12	2B9–F6124–00	手把杆保护 PROTECTOR, HANDLEBAR	1	1				
13	2B9–F6143–10	手把杆上侧盖 1 COVER,HAND,UPPER 1	1	1				
14	2B9–F6141–10	保护罩 1 GUARD, BRUSH 1	1	1				AP 浅紫深蓝色车用 AP FOR DPBMC
	2B9–F6141–20	保护罩 1 GUARD, BRUSH 1	1	1				AP 鸡尾酒鲜红色 1 车用 AP FOR VRC1
15	2B9–F6142–10	保护罩 2 GUARD, BRUSH 2	1	1				AP 浅紫深蓝色车用 AP FOR DPBMC
	2B9–F6142–20	保护罩 2 GUARD, BRUSH 2	1	1				AP 鸡尾酒鲜红色 1 车用 AP FOR VRC1
16	4FP–F6342–10	钢索套 BOOT, CABLE	1	1				AP AP
17	90387–068K0	轴套 COLLAR	2	2				AP AP
18	97002–06035	螺栓 BOLT	1	1				AP AP
19	90201–06844	平垫圈 WASHER, PLATE	2	2				AP AP
20	90387–06864	轴套 COLLAR	1	1				AP AP
21	95602–06100	锁紧螺母 NUT, U	1	1				AP AP
22	90109–06819	螺栓 BOLT	1	1				AP AP
23	4TU–H3936–00	开关导线箍带 BAND, SWITCH CORD	1	1				AP AP
24	90109–06818	螺栓 BOLT	1	1				AP AP

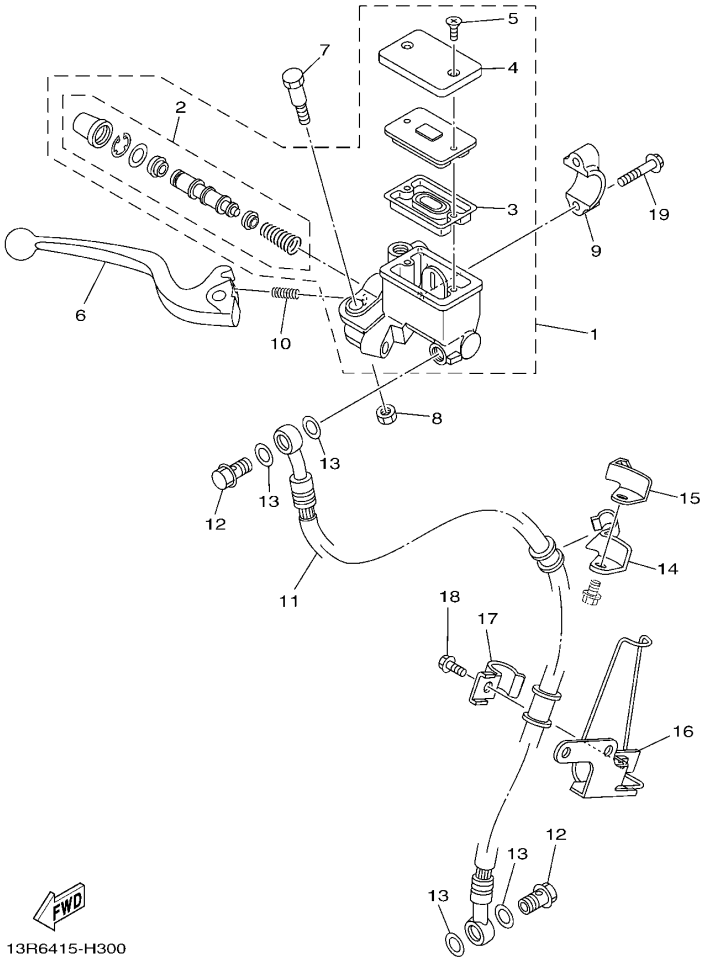

FIG. 31 前主缸 FRONT MASTER CYLINDER

参照号码	零件号码 PART NO.	零件名称 DESCRIPTION	46S1	46S2				备注 REMARKS
1	2B9–W583T–02	前主缸组合 MASTER CYLINDER ASSY	1	1				
2	3D9–W0041–02	. 前主缸套件 .CYLINDER KIT, MASTER	1	1				
3	4KL–F5854–00	. 油箱隔膜 .DIAPHRAGM, RESERVOIR	1	1				
4	4KL–F5852–00	. 储油箱盖 .CAP, RESERVOIR	1	1				
5	4KL–F589H–01	. 螺钉 .SCREW	2	2				
6	5VL–H3922–21	手柄 2 LEVER 2	1	1				
7	3D9–F589F–01	手柄螺栓 BOLT, LEVER	1	1				
8	3D9–F586F–01	手柄螺帽 NUT, U	1	1				
9	5VL–F5867–00	主缸托架 BRACKET, MASTER CYLINDER	1	1				
10	3D9–F5865–01	弹簧座 SPRING, SEAT	1	1				
11	2B9–F5872–21	制动软管 1 HOSE, BRAKE 1	1	1				
12	90401–10811	螺栓 BOLT, UNION	2	2				
13	90201–108J9	平垫圈 WASHER, PLATE	4	4				
14	5VL–F5887–00	制动软管支架 HOLDER, BRAKE HOSE	1	1				
15	5VL–F5886–00	制动软管支架 HOLDER, BRAKE HOSE	1	1				
16	5VL–F5875–01	制动软管支架 1 HOLDER, BRAKE HOSE 1	1	1				
17	5VL–F5876–00	制动软管支架 2 HOLDER, BRAKE HOSE 2	1	1				
18	95022–06016	凸缘螺栓 BOLT, FLANGE	1	1				
19	95022–06025	凸缘螺栓 BOLT, FLANGE	2	2				

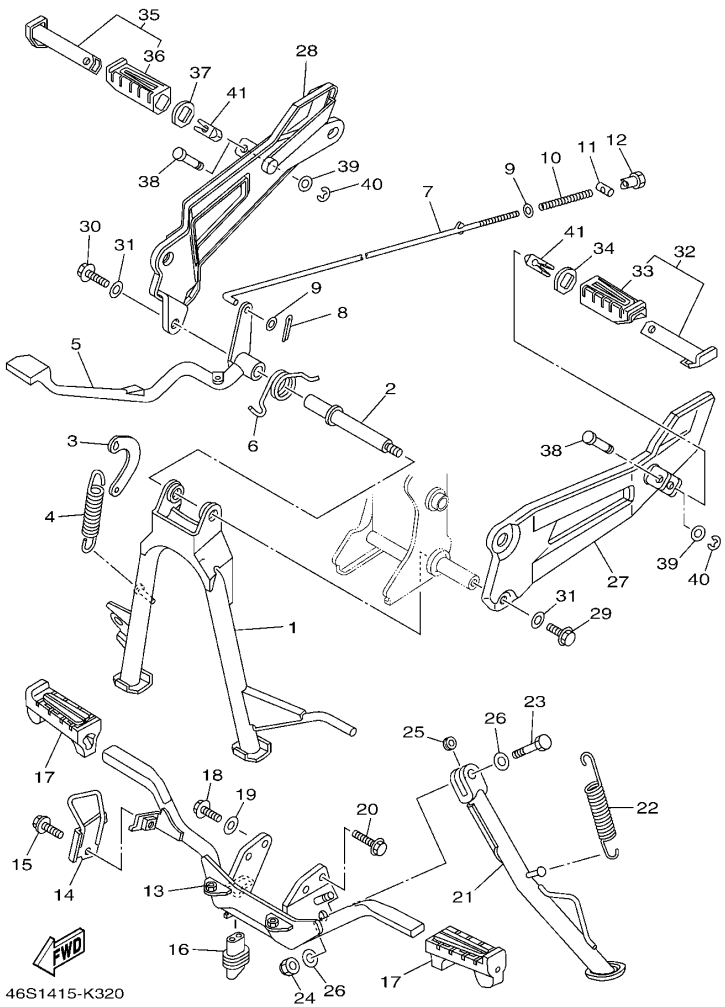

FIG. 32 搁脚・支架 STAND & FOOTREST

参照号码	零件号码 PART NO.	零件名称 DESCRIPTION	46S1	46S2				备注 REMARKS
1	2B9–F7111–01	主支承 STAND, MAIN	1	1				
2	5VL–F7112–11	主支承轴 SHAFT, MAIN STAND	1	1				
3	5VL–F7115–01	连接板 LINK, MAIN STAND	1	1				
4	90506–32800	拉簧 SPRING, TENSION	1	1				
5	3D9–F7211–00	制动踏板 PEDAL, BRAKE	1	1				
6	90508–40801	扭簧 SPRING, TORSION	1	1				
7	5VL–F7231–01	制动拉杆 ROD, BRAKE	1	1				
8	91402–20012	开口销 PIN, COTTER	1	1				
9	92902–06200	垫圈 WASHER	2	2				
10	90501–10806	压簧 SPRING, COMPRESSION	1	1				
11	90249–12808	销 PIN	1	1				
12	90179–06826	螺母 NUT	1	1				
13	46S–F7411–00	搁脚板 1 FOOTREST 1	1	1				
14	18C–F743H–00	限位板 3 STOPPER, 3	1	1				
15	90119–06869	带垫螺栓 BOLT, WITH WASHER	1	1				
16	5VL–H2109–00	软管接头 JOINT, HOSE	1	1				
17	5VL–F7413–00	搁脚套 COVER, FOOTREST	2	2				
18	95812–08020	凸缘螺栓 BOLT, FLANGE	1	1				
19	90201–08840	平垫圈 WASHER, PLATE	1	1				
20	95812–08025	凸缘螺栓 BOLT, FLANGE	1	1				
21	46S–F7311–00	侧支承 STAND, SIDE	1	1				
22	90506–29800	拉簧 SPRING, TENSION	1	1				
23	90101–10816	螺栓 BOLT	1	1				
24	90185–10813	自锁螺母 NUT, SELF-LOCKING	1	1				
25	3S9–F7313–01	轴套 COLLAR	1	1				
26	90201–10831	平垫圈 WASHER, PLATE	2	2				
27	5VL–F7452–00	搁脚板托架 1 BRACKET, FOOTREST 1	1	1				

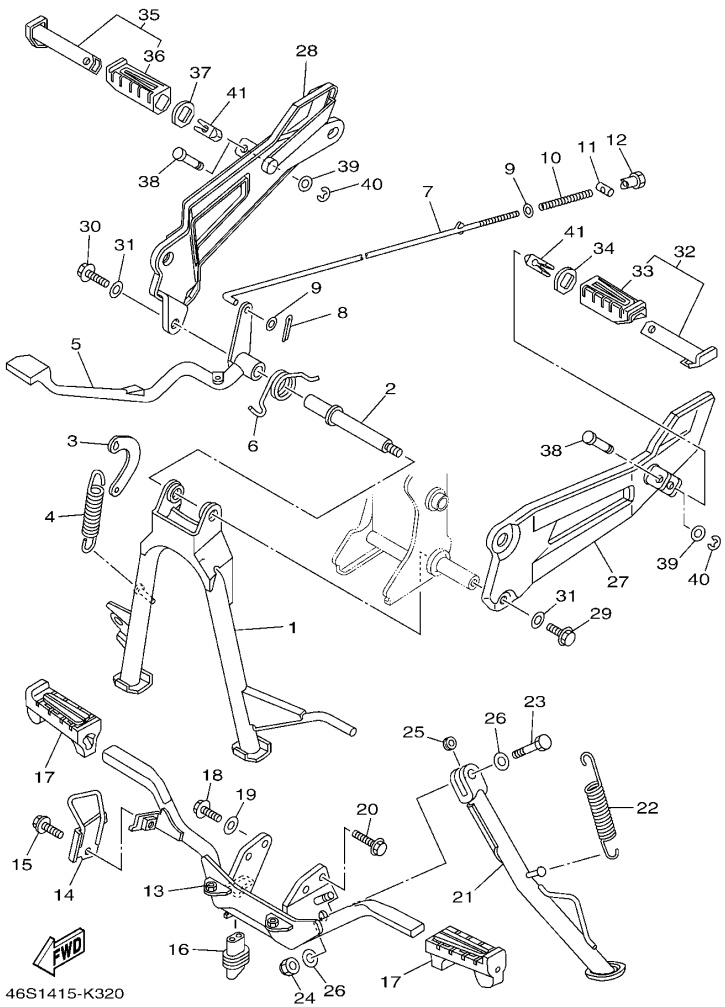

FIG. 32 搁脚・支架 STAND & FOOTREST

参照号码	零件号码 PART NO.	零件名称 DESCRIPTION	46S1	46S2				备注 REMARKS
28	3D9–F7462–00	搁脚板托架 2 BRACKET, FOOTREST 2	1	1				
29	95812–08020	凸缘螺栓 BOLT, FLANGE	1	1				
30	95812–08025	凸缘螺栓 BOLT, FLANGE	1	1				
31	92902–08200	垫圈 WASHER	2	2				
32	5VL–F7430–01	后搁脚板组合 1 REAR FOOTREST ASSY 1	1	1				
33	5VL–F7433–00	. 后搁脚板套 .COVER, REAR FOOTREST	1	1				
34	5VL–F7445–01	面板 1 PLATE 1	1	1				
35	5VL–F7440–01	后搁脚板组合 2 REAR FOOTREST ASSY 2	1	1				
36	5VL–F7444–00	. 后搁脚板套 .COVER, REAR FOOTREST	1	1				
37	5VL–F7445–01	面板 1 PLATE 1	1	1				
38	90249–06800	销 PIN	2	2				
39	92902–06200	垫圈 WASHER	2	2				
40	99002–05600	卡环 CLIP	2	2				
41	5VL–F7414–00	搁脚板减震 DAMPER, FOOTREST	2	2				

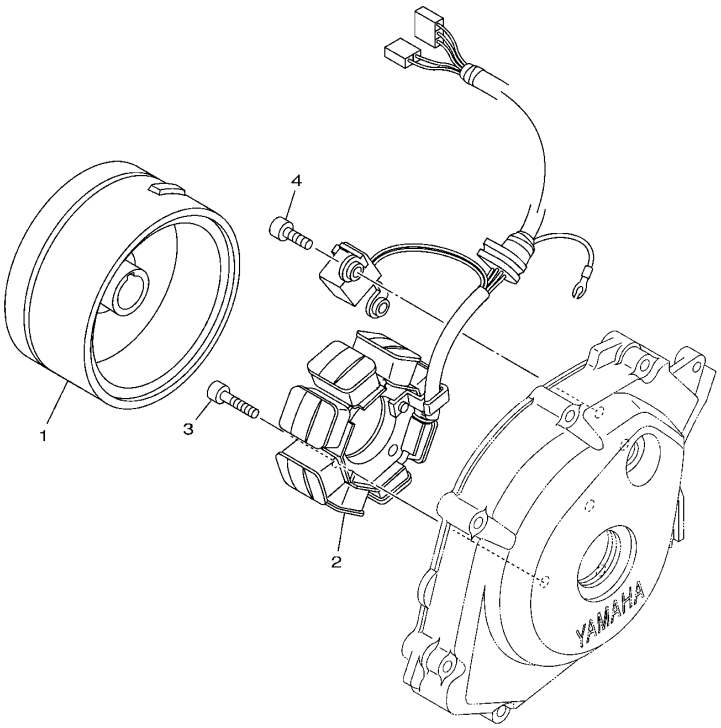

3D91300-D310

FIG. 33 发电机 GENERATOR

参照号码	零件号码 PART NO.	零件名称 DESCRIPTION	46S1	46S2				备注 REMARKS
1	3D9–H1450–01	转子组合 ROTOR ASSY	1	1				
2	3D9–H1410–01	定子组合 STATOR ASSY	1	1				
3	91312–06030	螺栓 BOLT	3	3				
4	91312–06014	螺栓 BOLT	2	2				

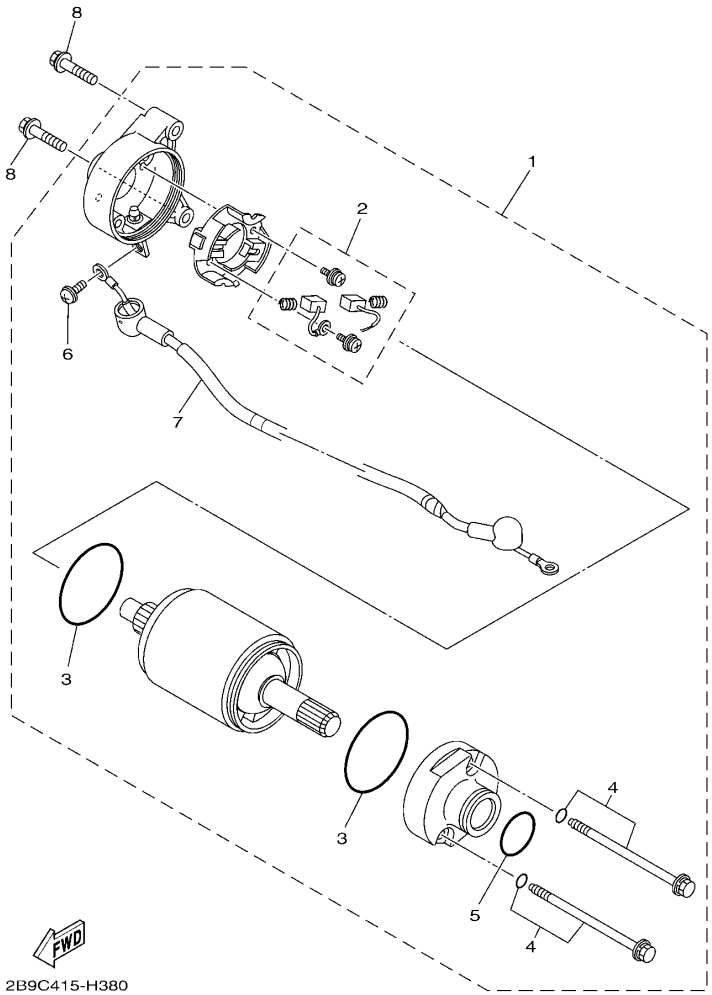

FIG. 34 起动电机 STARTING MOTOR

参照号码	零件号码 PART NO.	零件名称 DESCRIPTION	46S1	46S2				备注 REMARKS
1	5VL–H1800–01	起动电机组合 STARTING MOTOR ASSY	1	1				
2	4FP–H1801–00	. 碳刷组件 .BRUSH SET	1	1				
3	93210–55669	. 0 型环 .O-RING	2	2				
4	4FP–H1828–01	. 组合螺钉 .SCREW 1	2	2				
5	93210–25711	. 0 型环 .O-RING	1	1				
6	9760L–05108	. 带垫十字螺钉 .SCREW, PAN HEAD	1	1				
7	5VL–H183G–01	. 导线组件 .CORD COMP.	1	1				
8	95022–06025	凸缘螺栓 BOLT, FLANGE	2	2				

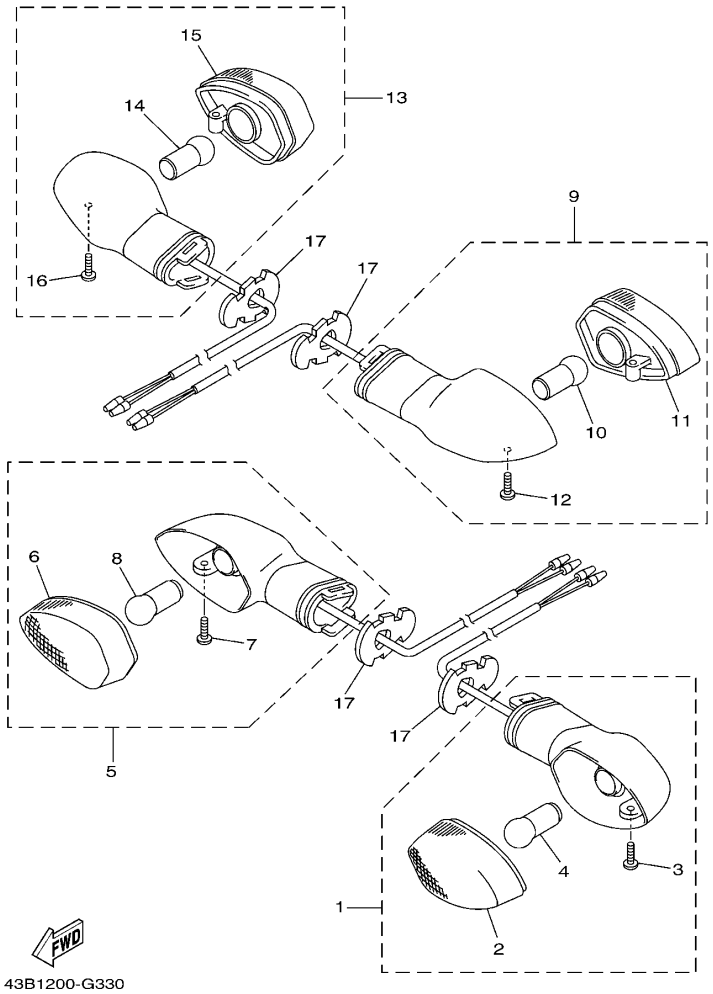

FIG. 35 转向灯 FLASHER LIGHT

参照号码	零件号码 PART NO.	零件名称 DESCRIPTION	46S1	46S2				备注 REMARKS
1	5D1–H3310–00	前转向灯组合 1 FRONT FLASHER LIGHT ASSY 1	1	1				
2	3D9–H333A–00	. 透镜组件 1 .LENS COMP 1	1	1				
3	3D9–H3333–10	. 镜面安装螺钉 .SCREW, LENS FITTING	1	1				
4	3D9–H3311–10	. 转向灯灯泡 .BULB, FLASHER (12V-10W)	1	1				
5	5D1–H3320–00	前转向灯组合 2 FRONT FLASHER LIGHT ASSY 2	1	1				
6	3D9–H334A–00	. 透镜组件 2 .LENS COMP 2	1	1				
7	3D9–H3333–10	. 镜面安装螺钉 .SCREW, LENS FITTING	1	1				
8	3D9–H3311–10	. 转向灯灯泡 .BULB, FLASHER (12V-10W)	1	1				
9	3D9–H3330–10	后转向灯组合 1 REAR FLASHER LIGHT ASSY 1	1	1				
10	3D9–H3311–10	. 转向灯灯泡 .BULB, FLASHER (12V-10W)	1	1				
11	3D9–H334A–00	. 透镜组件 2 .LENS COMP 2	1	1				
12	3D9–H3333–10	. 镜面安装螺钉 .SCREW, LENS FITTING	1	1				
13	3D9–H3340–10	后转向灯组合 2 REAR FLASHER LIGHT ASSY 2	1	1				
14	3D9–H3311–10	. 转向灯灯泡 .BULB, FLASHER (12V-10W)	1	1				
15	3D9–H333A–00	. 透镜组件 1 .LENS COMP 1	1	1				
16	3D9–H3333–10	. 镜面安装螺钉 .SCREW, LENS FITTING	1	1				
17	3D9–H3318–10	转向灯支承 1 STAY, FLASHER 1	4	4				

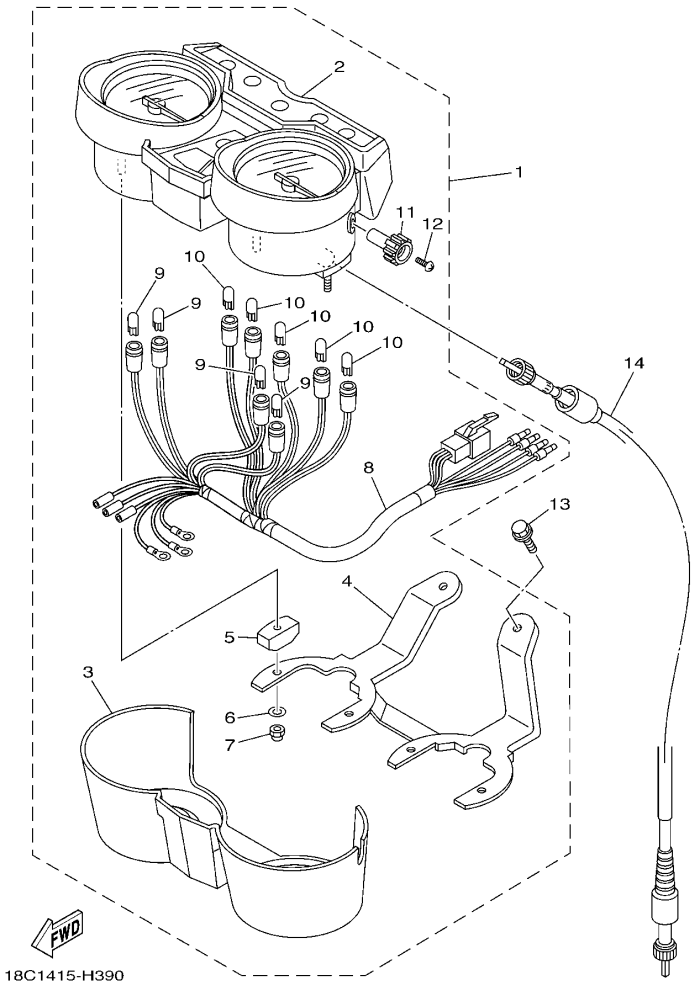

FIG. 36 仪表 METER

参照号码	零件号码 PART NO.	零件名称 DESCRIPTION	46S1	46S2				备注 REMARKS
1	18C–H3500–02	仪表组合 METER ASSY	1	1				
2	18C–H350A–00	. 仪表组件 .METER COMP.	1	1				
3	18C–H353H–00	. 下仪表盖 .CASE, UNDER	1	1				
4	5VL–H350E–00	. 支架 .BRACKET	1	1				
5	5VL–H3543–00	. 减震器托架 .DAMPER, BRACKET	4	4				
6	18C–H3524–00	. 专用垫圈 .WASHER, SPECIAL	4	4				
7	5VL–H354P–00	. 螺母 .NUT	4	4				
8	18C–H3509–00	. 导线组合 .SOCKET CORD ASSY	1	1				
9	4FP–H3517–10	. 灯泡 .BULB (12V-1.7W)	4	4				
10	4GU–H3517–10	. 灯泡 .BULB (14V-3W)	5	5				
11	5VL–H357H–00	. 回零旋钮 .KNOB	1	1				
12	5VL–H353S–00	. 旋钮安装螺钉 .SCREW, KNOB FITTING	1	1				
13	95022–06016	凸缘螺栓 BOLT, FLANGE	2	2				
14	2B9–H3550–11	速度计软轴组合 SPEEDOMETER CABLE ASSY	1	1				

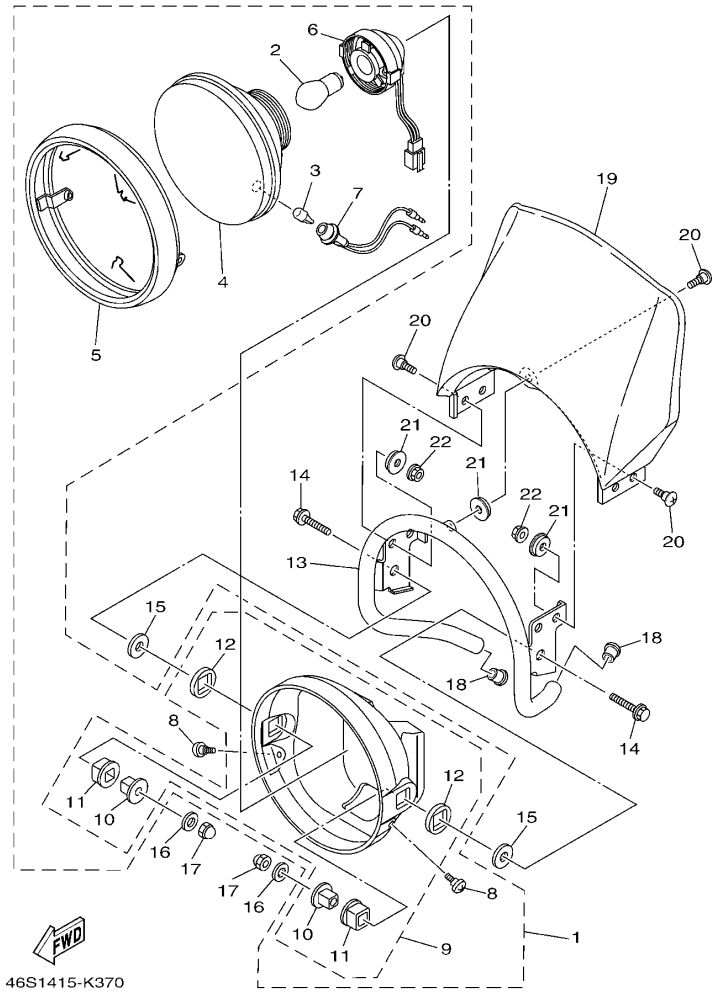

FIG. 37 前大灯 HEADLIGHT

参照号码	零件号码 PART NO.	零件名称 DESCRIPTION	46S1	46S2				备注 REMARKS
1	5VL–H4300–23	前照灯组合 HEADLIGHT ASSY	1					
2	5VL–H4314–20	. 前照灯灯泡 .BULB, HEADLIGHT (12V-35/35W)	1					
3	5VL–H4347–10	. 灯泡 .BULB (12V-5W)	1					
4	5VL–H4310–22	. 大灯组件 .HEADLIGHT UNIT ASSY	1					
5	5VL–H4315–21	. 前灯框 .RIM, HEADLIGHT	1					
6	5VL–H4312–10	. 导线组合 .CORD ASSY	1					
7	5VL–H4159–10	. 大灯导线 .CORD, HEADLIGHT	1					
8	5VL–H4526–00	. 螺钉 .SCREW	2					
9	5VL–H4330–22	. 灯体组合 .BODY ASSY	1					
10	5VL–H4145–00	. . 套管 ..COLLAR, BODY FITTING	2					
11	5VL–H4163–00	. . 衬套 ..DAMPER	2					
12	5VL–H4164–00	. . 衬套 ..DAMPER	2					
13	46S–H4169–00	前照灯防护装置 GUARD, HEADLIGHT	1					
14	95023–08035	螺栓 BOLT	2					
15	2B9–H4328–01	衬套 SPACER	2					
16	90201–08867	平垫圈 WASHER, PLATE	2					
17	95302–08800	盖形螺母 NUT, CROWN	2					
18	90338–14800	塞 PLUG	2					
19	46S–F8381–00	挡风玻璃 WINDSHIELD	1					
20	90149–05806	螺钉 SCREW	5					
21	5VL–F8215–01	专用垫圈 WASHER, SPECIAL	5					
22	95702–05500	螺母 NUT, FLANGE	4					

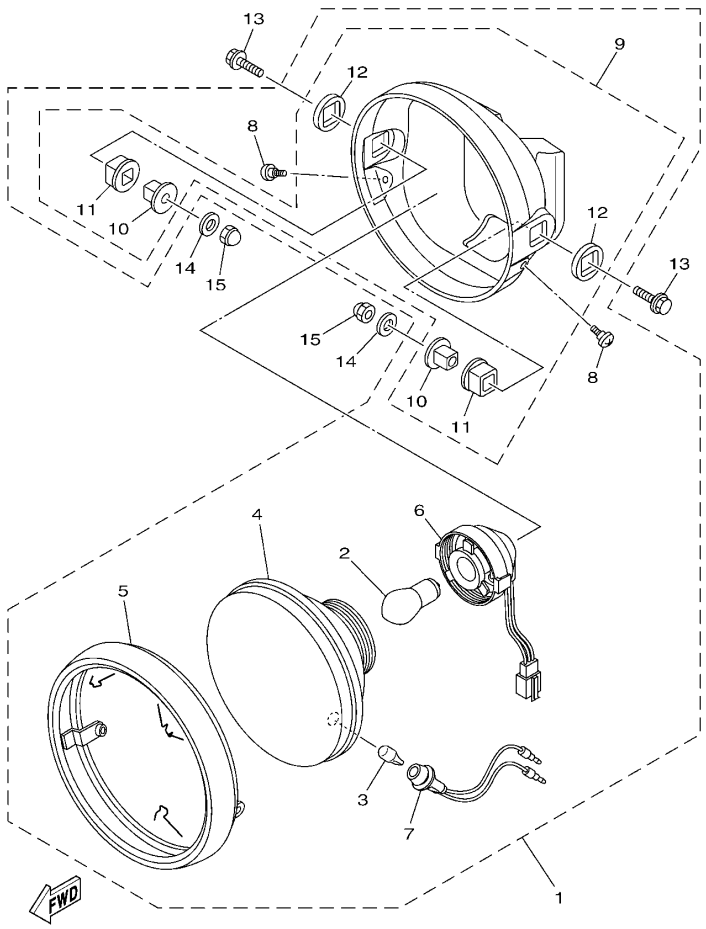

13R6415-H390

FIG. 38 前大灯 2 HEADLIGHT 2

参照号码	零件号码 PART NO.	零件名称 DESCRIPTION	46S1	46S2				备注 REMARKS
1	5VL–H4300–23	前照灯组合 HEADLIGHT ASSY		1				
2	5VL–H4314–20	. 前照灯灯泡 .BULB, HEADLIGHT (12V-35/35W)		1				
3	5VL–H4347–10	. 灯泡 .BULB (12V-5W)		1				
4	5VL–H4310–22	. 大灯组件 .HEADLIGHT UNIT ASSY		1				
5	5VL–H4315–21	. 前灯框 .RIM, HEADLIGHT		1				
6	5VL–H4312–10	. 导线组合 .CORD ASSY		1				
7	5VL–H4159–10	. 大灯导线 .CORD, HEADLIGHT		1				
8	5VL–H4526–00	. 螺钉 .SCREW		2				
9	5VL–H4330–22	. 灯体组合 .BODY ASSY		1				
10	5VL–H4145–00	. . 套管 ..COLLAR, BODY FITTING		2				
11	5VL–H4163–00	. . 衬套 ..DAMPER		2				
12	5VL–H4164–00	. . 衬套 ..DAMPER		2				
13	95023–08030	螺栓 BOLT		2				
14	90201–08830	平垫圈 WASHER, PLATE		2				
15	95302–08800	盖形螺母 NUT, CROWN		2				

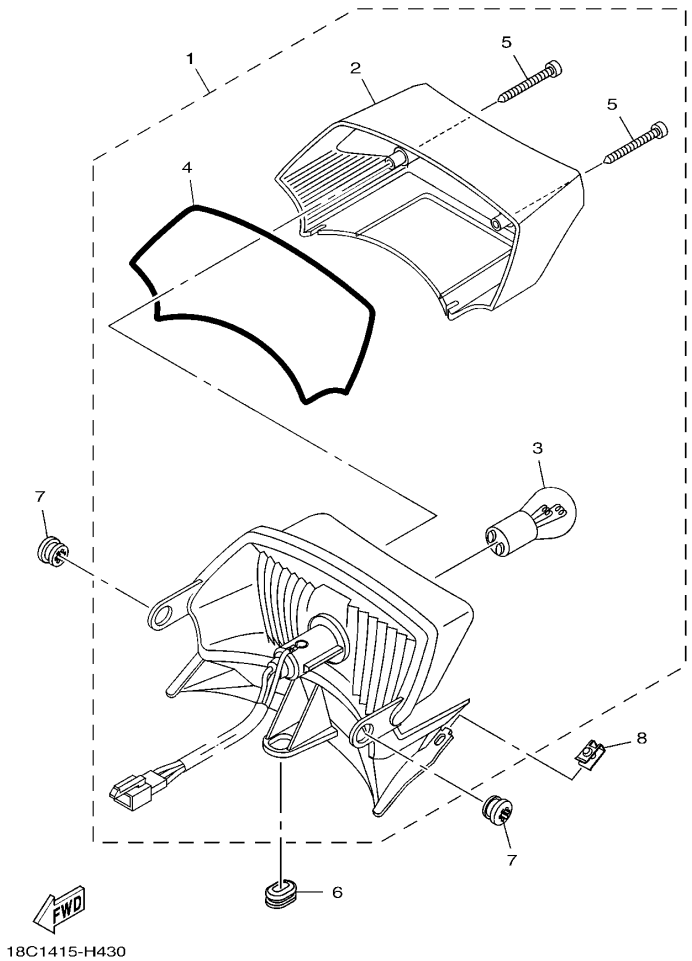

FIG. 39 尾灯 TAILLIGHT

参照号码	零件号码 PART NO.	零件名称 DESCRIPTION	46S1	46S2				备注 REMARKS
1	18C–H4700–01	尾灯组合 TAILLIGHT ASSY	1	1				
2	18C–H4721–01	. 尾灯透镜 .LENS, TAILLIGHT	1	1				
3	3D9–H4714–10	. 灯泡 .BULB (12V-21/5W)	1	1				
4	18C–H4704–00	. 尾灯衬垫 .GASKET, TAILLIGHT	1	1				
5	3D9–H4724–10	. 镜面安装螺钉 .SCREW, LENS FITTING	2	2				
6	90480–01868	橡胶垫 GROMMET	1	1				
7	90480–13810	橡胶垫 GROMMET	2	2				
8	90183–05807	弹性螺母 NUT, SPRING	2	2				

FIG. 40 手柄开关・杆 HANDLE SWITCH & LEVER

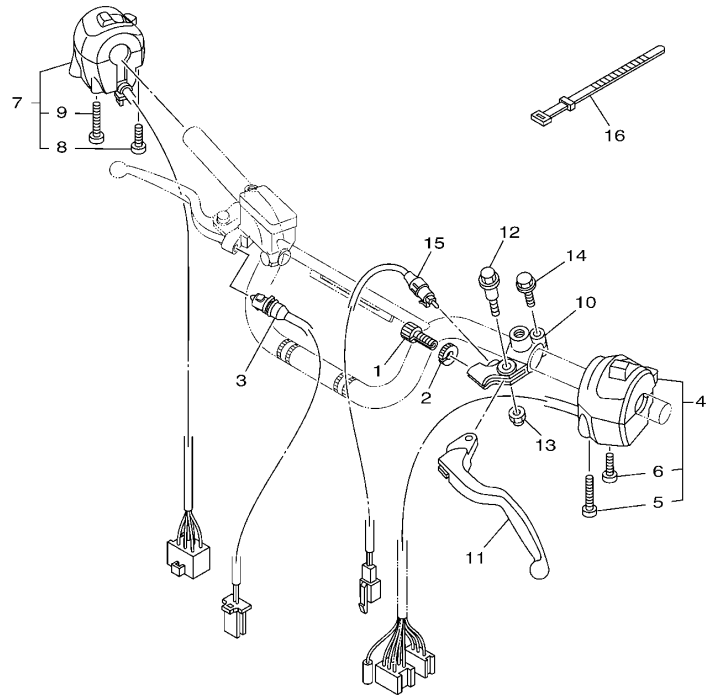

46S1415-K400

参照号码	零件号码 PART NO.	零件名称 DESCRIPTION	46S1	46S2				备注 REMARKS
1	90123–08813	螺栓 BOLT	1	1				
2	90179–08862	螺母 NUT	1	1				
3	5VL–H3980–01	前制动开关组合 FRONT STOP SWITCH ASSY	1	1				
4	5VL–H3973–01	手把开关 3 SWITCH, HANDLE 3	1	1				
5	98507–05043	. 十字螺钉 .SCREW, PAN HEAD	1	1				
6	98507–05025	. 十字螺钉 .SCREW, PAN HEAD	1	1				
7	18C–H3963–12	手把开关 3（右边） SWITCH, HANDLE 3	1	1				
8	98507–05030	. 十字螺钉 .SCREW, PAN HEAD	1	1				
9	98507–05050	. 十字螺钉 .SCREW, PAN HEAD	1	1				
10	4FP–H2911–00	手柄座 1 HOLDER, LEVER 1	1	1				
11	5VL–H3912–00	手柄 1 LEVER 1	1	1				
12	90109–06850	螺栓 BOLT	1	1				
13	95602–06100	锁紧螺母 NUT, U	1	1				
14	97590–06522	带垫螺栓 BOLT, WITH WASHER	1	1				
15	5VL–H2917–11	开关 SWITCH	1	1				
16	4TU–H3936–00	开关导线箍带 BAND, SWITCH CORD	2	2				

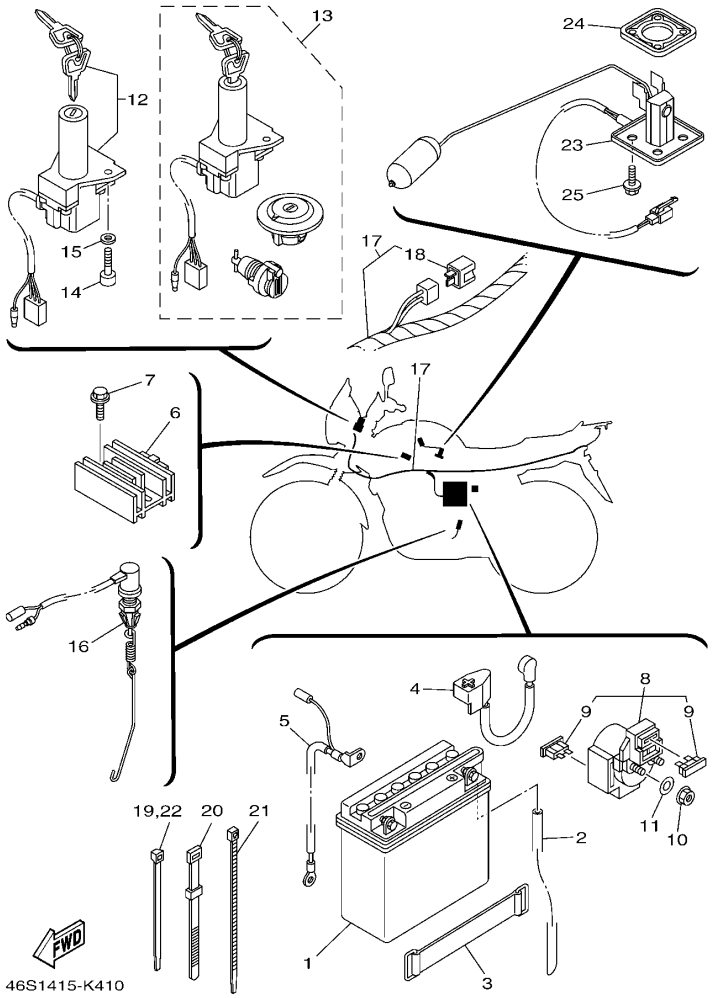

FIG. 41 电气系统 1 ELECTRICAL 1

参照号码	零件号码 PART NO.	零件名称 DESCRIPTION	46S1	46S2				备注 REMARKS
1	5VL–H2100–00	蓄电池组合 BATTERY ASSY (CB5L-B)	1	1				
2	90445–08830	软管 HOSE	1	1				
3	5VL–H2131–01	蓄电池带箍 BAND, BATTERY	1	1				
4	5VL–H2115–00	正极导线 WIRE, PLUS LEAD	1	1				
5	5VL–H2116–00	负极导线 WIRE, MINUS LEAD	1	1				
6	5VL–H1960–00	整流调节器 RECTIFIER & REGULATOR ASSY	1	1				
7	95802–06020	凸缘螺栓 BOLT, FLANGE	2	2				
8	5VL–H1940–01	起动继电器组合 STARTER RELAY ASSY	1	1				
9	4FP–H2151–00	. 保险丝 .FUSE (15A)	2	2				
10	95302–06600	螺母 NUT	2	2				
11	90201–068C2	平垫圈 WASHER, PLATE	2	2				
12	3D9–H2501–11	主开关方向锁组合 MAIN SWITCH STEERING LOCK	1	1				
13	18C–Y8250–00	锁总成 SWITCH ASSY	1	1				AP AP
14	91312–06020	螺栓 BOLT	2	2				
15	90201–068C2	平垫圈 WASHER, PLATE	2	2				
16	3S9–H2530–01	制动开关总成 STOP SWITCH ASSY	1	1				
17	18C–H2590–11	电缆总成 WIRE HARNESS ASSY	1	1				
18	5VL–H1980–10	. 二极管总成 .DIODE ASSY	1	1				
19	90464–35820	线夹 CLAMP	3	3				
20	5VL–H3936–00	开关导线箍带 BAND, SWITCH CORD	1	1				
21	90464–70801	线夹 CLAMP	1	1				
22	90464–35820	线夹 CLAMP	2	2				
23	18C–H5752–01	燃油表传感装置组合 SENDER UNIT ASSY, FUEL METER	1	1				
24	4FP–H5753–00	传感器垫圈 GASKET, SENDER UNIT	1	1				
25	90119–05022	带垫螺栓 BOLT, WITH WASHER	4	4				

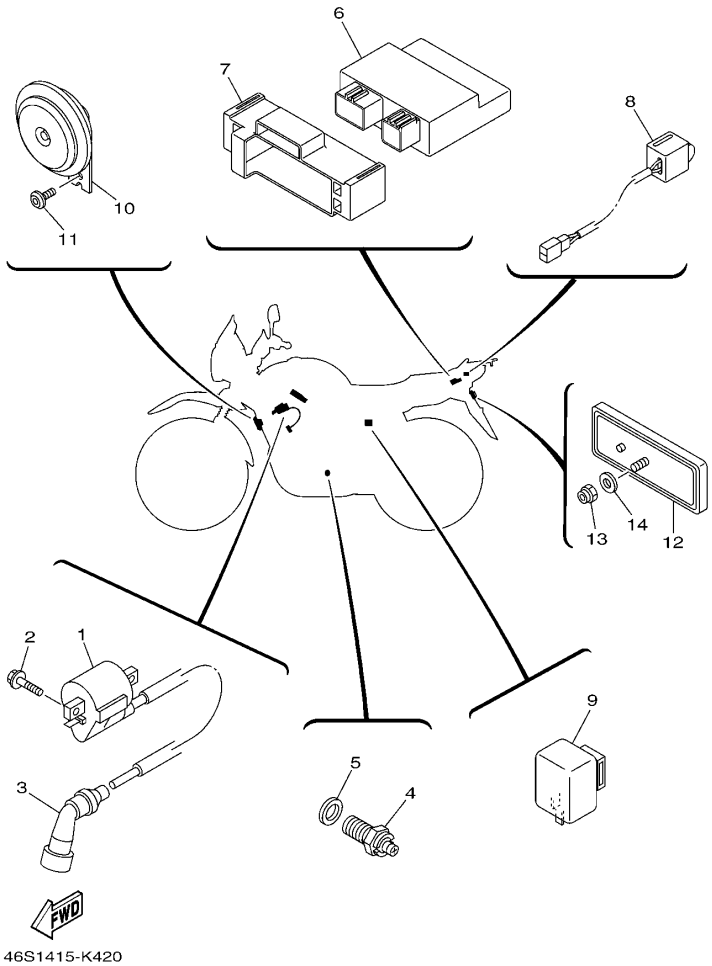

FIG. 42 电气系统 2 ELECTRICAL 2

参照号码	零件号码 PART NO.	零件名称 DESCRIPTION	46S1	46S2				备注 REMARKS
1	5VL–H2310–01	点火线圈组合 IGNITION COIL ASSY	1	1				
2	95022–06016	凸缘螺栓 BOLT, FLANGE	2	2				
3	4FP–H2370–01	火花塞帽组合 PLUG CAP ASSY	1	1				
4	5VL–H2540–01	空挡开关组合 NEUTRAL SWITCH ASSY	1	1				
5	90430–10819	衬垫 GASKET	1	1				
6	18C–H5540–00	CDI 总成 C.D.I. UNIT ASSY	1	1				
7	18C–H5546–00	箍带 BAND	1	1				
8	5FU–82560–30	温控开关组合 THERMO SWITCH ASSY	1	1				
9	18C–H3350–01	闪烁继电器组合 FLASHER RELAY ASSY	1	1				
10	3D9–H3371–02	电喇叭 HORN	1	1				
11	90149–06833	螺钉 SCREW	1	1				
12	4FP–H5130–21	后反射镜组合 REAR REFLECTOR ASSY	1	1				
13	95602–05100	锁紧螺母 NUT, U	1	1				
14	90201–05802	平垫圈 WASHER, PLATE	1	1				

零件号码 PART NO.	参照 号码
2UJ–11133–10	1 – 2
22F–11134–10	1 – 3
5KA–12113–00	3 – 5
5VL–12210–10	4 – 16
5YY–14103–00	7 – 21
18D–14105–00	7 – 23
18D–1410A–00	7 – 19
18D–14112–00	7 – 3
18D–14126–00	7 – 31
3SP–14128–00	7 – 29
22F–14139–00	7 – 27
5P0–14141–13	7 – 6
5P0–14142–17	7 – 25
5HK–14147–00	7 – 13
5TN–14150–00	7 – 26
353–14186–00	7 – 14
5LW–14191–00	7 – 17
3SP–14194–00	7 – 30
18D–14196–00	7 – 24
5YY–14197–00	7 – 16
3SP–14216–00	7 – 33
3G2–14231–22	7 – 9
18C–14261–00	7 – 7
18D–14264–00	7 – 32
18D–14276–00	7 – 34
5YP–14429–00	7 – 10
5YP–14561–00	7 – 12
18D–14589–10	7 – 4
18D–14867–00	7 – 35
18C–1490J–00	7 – 5
5CY–14951–00	7 – 37
5HK–14985–00	7 – 8
5LW–14994–00	7 – 18
5LW–24411–00	7 – 2
5FU–82103–00	7 – 38
5FU–82560–30	42 – 8
5FU–83790–00	7 – 36
5VL–E1111–10	1 – 1
5VL–E111F–00	4 – 6
3D9–E113F–00	8 – 14
5VL–E1161–00	1 – 8
5VL–E1166–00	9 – 4
4FP–E1167–00	9 – 3
5VL–E1181–00	1 – 16
5VL–E1185–10	1 – 7
5VL–E1186–00	1 – 11
5VL–E1310–00	1 – 19
5VL–E1351–10	1 – 20

零件号码 PART NO.	参照 号码
5VL–E1422–00	2 – 6
5VL–E1454–10	2 – 12
5VL–E1496–00	2 – 18
5VL–E1533–00	2 – 8
5VL–E1631–00	2 – 14
5VL–E1633–00	2 – 15
5VL–E1651–00	2 – 5
5VL–E1681–00	2 – 3
5VL–E2111–00	3 – 1
5VL–E2116–00	3 – 4
5VL–E2117–01	3 – 7
5VL–E2118–00	3 – 6
5VL–E2119–00	3 – 3
5VL–E2121–00	3 – 2
5VL–E2151–00	3 – 8
5VL–E2156–00	3 – 10
5VL–E2171–10	4 – 1
5VL–E2176–10	4 – 8
5VL–E2213–10	4 – 17
5VL–E2231–10	4 – 12
5VL–E2241–10	4 – 13
5VL–E3300–01	5 – 1
5VL–E3324–00	5 – 11
5VL–E3325–00	5 – 2
5VL–E3329–00	5 – 6
4FP–E3411–00	5 – 10
5VL–E3451–00	5 – 12
18C–E3575–01	6 – 18
18C–E3586–10	6 – 2
18C–E4410–01	6 – 5
5VL–E4411–10	6 – 6
5VL–E4412–00	6 – 7
5VL–E4417–00	6 – 16
5VL–E4424–01	6 – 15
5VL–E4437–10	6 – 10
5VL–E443E–00	6 – 14
5VL–E4450–11	6 – 8
5VL–E4452–00	6 – 11
18C–E4453–00	6 – 9
5VL–E4462–00	6 – 12
5VL–E4613–00	8 – 10
18C–E4758–00	8 – 3
18C–E4799–00	8 – 5
18D–E4803–00	8 – 23
5VL–E4815–00	8 – 15
18C–E4873–00	8 – 20
3D9–E4881–00	8 – 17
18C–E4882–00	8 – 22

零件号码 PART NO.	参照 号码
3D9–E4883–00	8 – 25
18C–E4901–00	7 – 1
5VL–E5191–00	10 – 10
5VL–E5362–00	10 – 19
5VL–E5411–10	10 – 1
5VL–E5418–01	10 – 12
5VL–E5421–00	10 – 14
5VL–E5441–00	9 – 11
5VL–E5451–10	10 – 2
5VL–E5461–10	10 – 15
5VL–E5512–00	12 – 1
5VL–E5517–00	12 – 5
5VL–E5521–00	12 – 2
5VL–E5532–00	12 – 3
4FP–E5580–00	12 – 7
5VL–E5598–00	4 – 14
47V–E5618–00	11 – 11
5VL–E5620–01	11 – 10
4FP–E5641–00	11 – 2
5VL–E5651–00	11 – 7
5VL–E5660–01	11 – 1
4FP–E5666–00	11 – 6
5VL–E6111–00	13 – 1
5VL–E6150–00	13 – 6
5VL–E6154–00	13 – 7
5VL–E6164–10	13 – 17
5VL–E6300–10	13 – 5
5VL–E6321–10	13 – 9
5VL–E6324–00	13 – 10
5VL–E6333–10	13 – 12
5VL–E6337–00	13 – 13
5VL–E6351–00	13 – 11
5VL–E6357–01	13 – 21
5VL–E6371–10	13 – 8
5VL–E6381–02	13 – 22
5VL–E7121–00	14 – 3
5VL–E7131–00	14 – 4
5VL–E7141–00	14 – 5
5VL–E7151–00	14 – 2
5VL–E7211–00	14 – 20
5VL–E7221–00	14 – 15
5VL–E7231–00	14 – 16
5VL–E7241–00	14 – 19
5VL–E7251–00	14 – 14
5VL–E7411–00	14 – 1
5VL–E7421–00	14 – 12
3D9–E7456–01	14 – 28
5VL–E7471–00	14 – 10

零件号码 PART NO.	参照 号码
5VL–E8101–11	16 – 7
5VL–E8110–11	16 – 9
1KL–E8113–00	16 – 10
5VL–E8140–00	16 – 1
4FP–E8177–00	16 – 3
2D0–E8185–00	15 – 2
5VL–E8337–00	16 – 2
5VL–E8511–00	15 – 5
5VL–E8512–00	15 – 6
5VL–E8513–00	15 – 7
5VL–E8531–00	15 – 8
5VL–E8535–00	15 – 9
18C–F1110–00–33	17 – 1
18C–F115R–01	25 – 40
2B9–F1316–00	17 – 2
5VL–F1317–00	17 – 7
5VL–F1318–00	17 – 8
18C–F134X–01	25 – 41
18C–F137U–00	25 – 22
18C–F137V–00	25 – 25
2B9–F1471–00	17 – 16
2B9–F1472–01	17 – 17
2B9–F1502–10	18 – 5
2B9–F1511–00	18 – 1
2B9–F1511–10	18 – 1
2B9–F1513–01	19 – 2
2B9–F1514–01	18 – 7
5VL–F1518–01	18 – 6
	19 – 5
2B9–F1541–00	19 – 6
2B9–F1542–00	19 – 7
2B9–F1544–01	18 – 3
	18 – 9
2B9–F1581–00	22 – 24
5VL–F1581–00	23 – 24
18C–F1611–00	18 – 10
	19 – 9
5VL–F1746–00	20 – 11
5VL–F1778–00	20 – 5
18C–F177G–00	20 – 10
5VL–F1780–01	20 – 6
5VL–F2110–00–33	21 – 1
5VL–F2123–00	21 – 3
5VL–F2127–00	21 – 6
5VL–F2128–01	21 – 4
5VL–F2141–01	21 – 7
5VL–F2151–10	21 – 10
5VL–F2210–01	21 – 13

零件号码 PART NO.	参照 号码
5VL–F2311–00	21 – 11
46S–F3102–00	24 – 1
46S–F3103–00	24 – 18
2B9–F3106–20	24 – 2
2B9–F3107–20	24 – 19
46S–F3110–00	24 – 6
	24 – 23
5VL–F3111–20	24 – 15
	24 – 32
2B9–F3118–00	24 – 13
	24 – 30
5VL–F3141–40	24 – 11
	24 – 28
4GU–F3144–00	24 – 5
	24 – 22
4GU–F3145–00	24 – 3
	24 – 20
5AP–F3147–00	24 – 14
	24 – 31
5AP–F3153–00	24 – 4
	24 – 21
5VL–F3154–00	24 – 16
	24 – 33
5VL–F3165–01	22 – 12
	23 – 12
5VL–F3170–01	24 – 7
	24 – 24
4GU–F3173–01	24 – 8
	24 – 25
46S–F3174–00	22 – 15
46S–F3174–10	23 – 15
4FP–F317J–00	22 – 17
	23 – 17
2B9–F3191–00	24 – 38
2B9–F3192–01	24 – 39
5VL–F3340–01	24 – 35
5VL–F3346–01	24 – 36
2B9–F334G–11	22 – 21
5VL–F334G–11	23 – 21
5LK–F3356–01	24 – 10
	24 – 27
18C–F3389–00	23 – 18
2B9–F3389–00	22 – 18
2B9–F3395–00	22 – 20
4FP–F3395–10	23 – 20
4FP–F3411–00	22 – 2
	23 – 2
4FP–F3411–10	24 – 37

零件号码 PART NO.	参照 号码
1KL–F3412–00	22 – 1
	23 – 1
4FP–F3412–00	22 – 3
	23 – 3
4GU–F3416–00	22 – 5
	23 – 5
5VL–F3418–01	22 – 7
	23 – 7
5VL–F341E–00	22 – 4
	23 – 4
5AP–F3427–00	24 – 12
	24 – 29
5VL–F3435–00–33	22 – 9
	23 – 9
5VL–F3441–00	22 – 13
	23 – 13
4TU–F3479–00	24 – 9
	24 – 26
12B–F411J–00	25 – 35
18C–F4170–00	25 – 37
18C–F4180–00	25 – 38
2TY–F4181–00	8 – 9
4FP–F4181–00	25 – 2
5VL–F4182–00	25 – 4
5VL–F4183–00	25 – 3
18C–F4216–00	25 – 28
18C–F4217–00	25 – 36
5VL–F4311–00	25 – 18
18C–F4312–00	25 – 45
18C–F4313–00	25 – 46
18C–F4314–00	25 – 47
18C–F4315–00	25 – 48
5VL–F4500–00	25 – 7
5VL–F4512–00	25 – 10
5VL–F4515–00	25 – 12
5VL–F4523–00	25 – 11
5VL–F4524–01	25 – 13
5VL–F4534–00	25 – 8
18C–F4610–01	25 – 17
18C–F471K–00–P5	26 – 4
18C–F471K–00–P6	26 – 4
18C–F472K–00–P5	26 – 5
18C–F472K–00–P6	26 – 5
18C–F4730–01	26 – 1
4TU–F4741–00	8 – 2
	26 – 2
18C–F474K–01	26 – 13
18C–F474L–01	26 – 14

零件号码索引
NUMERICAL INDEX

零件号码 PART NO.	参照 号码
51P–F4773–00	26 – 10
18C–F483H–00	25 – 39
4GU–F5118–00	27 – 11
4GU–F511X–01	27 – 9
3D9–F5168–00–33	27 – 1
5VL–F5181–11	27 – 7
3D9–F5188–00	27 – 13
4GU–F5190–11	27 – 8
5VL–F5321–01–33	29 – 8
3D9–F5338–00–33	29 – 1
4GU–F533A–01	29 – 16
4GU–F5351–02	29 – 12
5VL–F5355–01	29 – 13
1KL–F5364–00	29 – 7
5VL–F5366–00	29 – 17
5VL–F5371–00	29 – 27
5VL–F5377–01	29 – 35
5VL–F5381–01	29 – 32
5VL–F5386–01	29 – 34
5VL–F5387–01	29 – 20
5VL–F5388–01	29 – 36
5VL–F53C0–00	29 – 39
5LK–F5412–01	29 – 23
5VL–F5445–01	29 – 21
3D9–F580U–01	28 – 3
3D9–F582U–00	28 – 1
4KL–F5852–00	31 – 4
4KL–F5854–00	31 – 3
3D9–F5865–01	31 – 10
5VL–F5867–00	31 – 9
3D9–F586F–01	31 – 8
2B9–F5872–21	31 – 11
5VL–F5875–01	31 – 16
5VL–F5876–00	31 – 17
5VL–F5886–00	31 – 15
5VL–F5887–00	31 – 14
3D9–F589F–01	31 – 7
4KL–F589H–01	31 – 5
4S5–F5917–00	28 – 12
4S5–F5919–00	28 – 11
4S5–F5921–01	28 – 8
4S5–F5924–01	28 – 13
4S5–F5925–00	28 – 14
4S5–F5937–00	28 – 9
4S5–F5939–00	28 – 10
2B9–F6111–10	30 – 1
2B9–F6124–00	30 – 12
2B9–F6141–10	30 – 14
2B9–F6141–20	30 – 14
2B9–F6142–10	30 – 15
2B9–F6142–20	30 – 15
2B9–F6143–10	30 – 13
18C–F6240–00	30 – 2
5VL–F6241–10	30 – 3
5VL–F6280–12	30 – 10
5VL–F628J–10	30 – 4
5VL–F6290–12	30 – 11
46S–F6311–00	30 – 5
46S–F6312–00	30 – 7
2B9–F6335–11	30 – 8
4FP–F6342–10	30 – 16
5VL–F6372–01	30 – 9
2B9–F7111–01	32 – 1
5VL–F7112–11	32 – 2
5VL–F7115–01	32 – 3
3D9–F7211–00	32 – 5
5VL–F7231–01	32 – 7
46S–F7311–00	32 – 21
3S9–F7313–01	32 – 25
46S–F7411–00	32 – 13
5VL–F7413–00	32 – 17
5VL–F7414–00	32 – 41
5VL–F7430–01	32 – 32
5VL–F7433–00	32 – 33
18C–F743H–00	32 – 14
5VL–F7440–01	32 – 35
5VL–F7444–00	32 – 36
5VL–F7445–01	32 – 34
	32 – 37
5VL–F7452–00	32 – 27
3D9–F7462–00	32 – 28
5VL–F8100–01	17 – 19
5VL–F811G–01	17 – 20
5VL–F8215–01	37 – 21
46S–F8381–00	37 – 19
3D9–H1410–01	33 – 2
3D9–H1450–01	33 – 1
5VL–H1800–01	34 – 1
4FP–H1801–00	34 – 2
4FP–H1828–01	34 – 4
5VL–H183G–01	34 – 7
5VL–H1940–01	41 – 8
5VL–H1960–00	41 – 6
5VL–H1980–10	41 – 18
5VL–H2100–00	41 – 1
5VL–H2109–00	32 – 16
5VL–H2115–00	41 – 4
5VL–H2116–00	41 – 5
5VL–H2131–01	41 – 3
4FP–H2151–00	41 – 9
5VL–H2310–01	42 – 1
4FP–H2370–01	42 – 3
3D9–H2501–11	41 – 12
3S9–H2530–01	41 – 16
5VL–H2540–01	42 – 4
18C–H2590–11	41 – 17
4FP–H2911–00	40 – 10
5VL–H2917–11	40 – 15
5D1–H3310–00	35 – 1
3D9–H3311–10	35 – 4
	35 – 8
	35 – 10
	35 – 14
3D9–H3318–10	35 – 17
5D1–H3320–00	35 – 5
3D9–H3330–10	35 – 9
3D9–H3333–10	35 – 3
	35 – 7
	35 – 12
	35 – 16
3D9–H333A–00	35 – 2
	35 – 15
3D9–H3340–10	35 – 13
3D9–H334A–00	35 – 6
	35 – 11
18C–H3350–01	42 – 9
3D9–H3371–02	42 – 10
18C–H3500–02	36 – 1
18C–H3509–00	36 – 8
18C–H350A–00	36 – 2
5VL–H350E–00	36 – 4
4FP–H3517–10	36 – 9
4GU–H3517–10	36 – 10
18C–H3524–00	36 – 6
18C–H353H–00	36 – 3
5VL–H353S–00	36 – 12
5VL–H3543–00	36 – 5
5VL–H354P–00	36 – 7
2B9–H3550–11	36 – 14
5VL–H357H–00	36 – 11
5VL–H3912–00	40 – 11
5VL–H3922–21	31 – 6
4TU–H3936–00	30 – 23
	40 – 16
5VL–H3936–00	41 – 20
18C–H3963–12	40 – 7
5VL–H3973–01	40 – 4
5VL–H3980–01	40 – 3
5VL–H4145–00	37 – 10
	38 – 10
5VL–H4159–10	37 – 7
	38 – 7
5VL–H4163–00	37 – 11
	38 – 11
5VL–H4164–00	37 – 12
	38 – 12
46S–H4169–00	37 – 13
5VL–H4300–23	37 – 1
	38 – 1
5VL–H4310–22	37 – 4
	38 – 4
5VL–H4312–10	37 – 6
	38 – 6
5VL–H4314–20	37 – 2
	38 – 2
5VL–H4315–21	37 – 5
	38 – 5
2B9–H4328–01	37 – 15
5VL–H4330–22	37 – 9
	38 – 9
5VL–H4347–10	37 – 3
	38 – 3
5VL–H4526–00	37 – 8
	38 – 8
18C–H4700–01	39 – 1
18C–H4704–00	39 – 4
3D9–H4714–10	39 – 3
18C–H4721–01	39 – 2
3D9–H4724–10	39 – 5
5VL–H5110–01	24 – 17
	24 – 34
4FP–H5130–21	42 – 12
18C–H5540–00	42 – 6
18C–H5546–00	42 – 7
18C–H5752–01	41 – 23
4FP–H5753–00	41 – 24
18D–H5885–00	7 – 11
3D9–W0041–02	31 – 2
4S5–W0045–00	28 – 6
4S5–W0047–00	28 – 5
4S5–W0048–01	28 – 7
4S5–W0057–00	28 – 4
5VL–W1140–10	2 – 1
5VL–W1141–10	2 – 2
5VL–W1161–00	2 – 17
18C–W137W–00–P3	25 – 20
18C–W137W–00–P4	25 – 20
18C–W137X–00–P5	25 – 23
18C–W137X–00–P6	25 – 23
5VL–W1510–10	9 – 1
18C–W2411–00–P3	25 – 1
18C–W2411–00–P4	25 – 1
5VL–W2533–21	29 – 9
2B9–W583T–02	31 – 1
5VL–Y1153–20	2 – 7
5VL–Y1215–00	3 – 9
18C–Y1471–02	8 – 1
5VL–Y1635–10	13 – 14
5VL–Y1854–00	15 – 1
2B9–Y2150–10	18 – 4
2B9–Y2151–02–P0	19 – 1
2B9–Y2151–02–P4	19 – 1
18C–Y2171–05–P0	20 – 1
18C–Y2172–05–P0	20 – 3
18C–Y2475–00–P5	26 – 6
18C–Y2475–00–P6	26 – 6
18C–Y8250–00	41 – 13
90101–06848	29 – 14
90101–08820	4 – 10
90101–10816	32 – 23
90105–08724	1 – 13
90105–08873	17 – 12
90105–08874	17 – 4
90105–088E4	17 – 9
90105–088E5	17 – 10
90105–088E6	17 – 13
90105–10831	28 – 15
90109–06818	30 – 24
90109–06819	30 – 22
90109–06850	40 – 12
90109–08847	29 – 28
90109–08848	29 – 29
90109–08864	29 – 22
90111–05803	25 – 33
90111–06015	8 – 6
90111–08805	28 – 2
90119–05022	41 – 25
90119–06811	20 – 12
90119–06869	6 – 17
	18 – 12
90119–06869	19 – 11
	20 – 9
	26 – 3
	26 – 8
	32 – 15
90123–08813	40 – 1
90149–05806	37 – 20
90149–06833	8 – 4
	42 – 11
90151–06818	15 – 4
90153–06803	1 – 5
90153–08804	29 – 38
90155–06800	5 – 7
90157–03800	25 – 14
90159–06820	25 – 15
90159–06830	21 – 12
90170–12060	13 – 19
90170–22850	20 – 7
90176–10810	21 – 15
90176–22801	22 – 11
	23 – 11
90179–05523	25 – 34
90179–06826	32 – 12
90179–08639	29 – 24
90179–08830	17 – 6
	17 – 11
	17 – 14
90179–08862	40 – 2
90179–10807	17 – 5
90179–12813	11 – 12
	13 – 4
90179–12863	2 – 22
90179–25806	22 – 6
	23 – 6
90183–05807	18 – 11
	19 – 10
	39 – 8
90185–10813	32 – 24
90185–14806	27 – 12
90201–05802	22 – 23
	23 – 23
	42 – 14
90201–05811	19 – 4
90201–06844	30 – 19
90201–068C2	41 – 11
	41 – 15
90201–07641	5 – 4
90201–08326	4 – 9

零件号码 PART NO.	参照 号码
90201–08830	38 – 14
90201–08840	8 – 13
	17 – 15
	32 – 19
90201–08867	37 – 16
90201–088C3	1 – 14
90201–088P2	25 – 5
90201–10831	32 – 26
90201–108C7	21 – 14
90201–108J9	31 – 13
90201–122H1	2 – 21
	13 – 3
90201–12819	21 – 9
90201–152H7	11 – 8
90201–15700	14 – 21
90201–20266	14 – 6
	14 – 17
90201–20272	14 – 23
90201–208D5	11 – 4
90201–228F6	20 – 8
90201–258D7	12 – 6
90202–09800	25 – 31
90202–26142	22 – 8
	23 – 8
90208–07052	5 – 5
90208–26800	2 – 9
90209–16802	27 – 14
90215–12211	13 – 18
90249–06800	32 – 38
90249–12808	32 – 11
90267–48854	19 – 3
90280–03017	2 – 20
90282–05001	13 – 2
90331–07031	14 – 13
90338–14800	37 – 18
90338–16148	26 – 11
90340–12097	5 – 8
90340–14810	10 – 6
90340–32812	10 – 8
90386–18801	21 – 2
90387–06023	8 – 8
90387–06864	30 – 20
90387–06879	25 – 30
90387–068K0	30 – 17
90387–15809	29 – 2
90387–158K1	27 – 10
90387–16804	4 – 4
90401–10811	31 – 12

零件号码 PART NO.	参照 号码
90430–05800	25 – 16
90430–06817	1 – 6
	4 – 19
90430–10819	42 – 5
90430–12227	5 – 9
90445–08830	41 – 2
90450–44804	6 – 1
90461–15801	25 – 43
90462–16801	9 – 6
90464–35820	41 – 19
	41 – 22
90464–70801	41 – 21
90467–07029	25 – 51
90467–09006	25 – 49
90467–09854	25 – 19
90467–10008	25 – 50
90467–12828	9 – 5
90467–14802	8 – 26
90467–16807	8 – 18
90467–18806	8 – 21
90467–19801	8 – 19
90468–26813	11 – 3
90480–01868	25 – 32
	26 – 9
	39 – 6
90480–12581	8 – 7
90480–13810	39 – 7
90480–13837	20 – 4
90480–15878	25 – 21
	25 – 24
90480–20M05	8 – 27
90480–24186	20 – 2
90501–10806	32 – 10
90501–16001	2 – 10
90506–12801	29 – 10
90506–15802	29 – 11
90506–29800	32 – 22
90506–32800	32 – 4
90508–16800	13 – 23
90508–26836	11 – 5
90508–32801	16 – 5
90508–40801	32 – 6
90560–15293	27 – 2
91312–05010	14 – 29
91312–06012	4 – 7
91312–06014	33 – 4
91312–06020	6 – 4
	8 – 11

零件号码 PART NO.	参照 号码
91312–06020	41 – 14
91312–06030	33 – 3
91312–06090	1 – 18
91312–08016	12 – 8
91402–20012	29 – 31
	32 – 8
92012–06012	8 – 24
92902–06200	13 – 15
	32 – 9
	32 – 39
92902–08200	32 – 31
92907–08100	7 – 28
93101–10800	10 – 21
93101–12812	16 – 4
93102–12802	13 – 24
93102–20854	14 – 25
93102–20857	27 – 4
93104–22802	29 – 5
93106–26804	29 – 19
93109–18802	21 – 5
93109–20806	11 – 13
93210–108B1	4 – 3
93210–14899	10 – 7
93210–19809	10 – 20
93210–25711	34 – 5
93210–30611	6 – 3
93210–328A4	10 – 9
93210–42807	29 – 6
93210–44889	1 – 12
93210–55669	34 – 3
93210–57897	1 – 21
93210–79801	1 – 9
93306–002Y1	4 – 5
93306–003X6	4 – 2
93306–004YL	29 – 18
93306–201Y8	14 – 8
93306–202XN	2 – 19
93306–202XP	14 – 26
93306–202Y4	27 – 3
	29 – 3
93306–203YT	14 – 9
93306–204YD	14 – 24
93306–205YP	2 – 13
93306–252X5	29 – 4
93310–629Y3	2 – 4
93410–20809	14 – 7
	14 – 18
93440–10109	1 – 4

零件号码 PART NO.	参照 号码
93450–16812	2 – 16
93503–16824	13 – 20
93604–08800	2 – 11
93604–10837	15 – 3
93608–30839	16 – 8
93822–14813	14 – 27
93900–00826	27 – 6
	29 – 26
94109–18812	29 – 25
94130–18822	27 – 5
94568–A4090	4 – 11
94668–83001	29 – 40
94700–00869	1 – 15
95022–06016	4 – 18
	8 – 16
	31 – 18
	36 – 13
	42 – 2
95022–06020	1 – 10
95022–06025	31 – 19
	34 – 8
95022–06030	9 – 7
95022–06035	10 – 4
	10 – 17
95022–06045	9 – 8
	10 – 18
95022–06050	10 – 5
95022–06055	9 – 9
95022–08035	22 – 14
	23 – 14
95022–08040	22 – 10
	23 – 10
95023–08030	38 – 13
95023–08035	37 – 14
95302–06600	13 – 16
	29 – 15
	41 – 10
95302–08800	37 – 17
	38 – 15
95312–08600	29 – 37
95602–05100	42 – 13
95602–06100	30 – 21
	40 – 13
95602–12200	21 – 8
95602–14200	29 – 33
95702–05500	37 – 22
95702–08500	29 – 30
95802–04016	24 – 40

零件号码 PART NO.	参照 号码
95802–06012	17 – 18
	25 – 27
	25 – 42
95802–06020	4 – 15
	25 – 29
	41 – 7
95812–08020	8 – 12
	26 – 12
	32 – 18
	32 – 29
95812–08025	32 – 20
	32 – 30
95812–10080	17 – 3
95822–06012	22 – 19
	23 – 19
95822–06016	19 – 8
	22 – 16
	23 – 16
95822–06020	18 – 8
97002–05012	22 – 22
	23 – 22
97002–06016	18 – 2
97002–06035	30 – 18
97002–08016	25 – 6
97022–06020	16 – 11
97590–06522	40 – 14
97602–05212	25 – 44
97602–06220	6 – 13
9760L–05108	34 – 6
97702–50012	26 – 7
97702–50016	25 – 26
97880–03008	25 – 9
98502–05010	30 – 6
98507–04008	7 – 15
98507–04014	7 – 22
98507–05008	7 – 20
98507–05025	40 – 6
98507–05030	40 – 8
98507–05043	40 – 5
98507–05050	40 – 9
98512–06010	10 – 11
98512–06012	12 – 4
	14 – 11
98902–06016	10 – 13
99002–05600	5 – 3
	32 – 40
99002–10600	16 – 6
99009–15400	11 – 9

零件号码 PART NO.	参照 号码
99009–15400	14 – 22
99009–20500	13 – 25
99530–10114	1 – 17
	9 – 2
	9 – 10
	10 – 3
	10 – 16

雅马哈纯正机油大集结

YAMALUBE®

纯 正 机 油

品质保证！ 动力之源！

请经销YAMALUBE纯正机油！

90793-AC421-T1
90793-AC421-G1
SAE 10W-40（1L）
高等级/通用

90793-AC422-00
SAE 10W-30（1L）
跨骑车专用

90793-AC423-T1
90793-AC423-G1
SAE 20W-40（1L）
跨骑车专用

90793-AC427-T1
90793-AC427-G1
SAE 10W-40（0.8L）
弯梁车专用

90793-AC426-T1
SAE 5W-30（1L）
冬季专用/通用

90793-AC424-00
SAE 10W-30（1L）
踏板车专用

90793-AC425-T1
90793-AC425-G1
SAE 20W-40（1L）
踏板车专用

90793-AC404
GEAR（0.13L）
齿轮油
踏板车专用

友情提示：磨合期后，建议每1500KM更换一次机油(可根据实际使用状况减少里程数)。并清洗机油滤网。